CEO Message:

Dear Customer:

Thank you for your interest to our company, our product and service.

We have been in the laser and image optics market for more than 9 years. Based in Singapore, the hub of South East Asia, we have embedded quality and customer service grains deeply in our organization. We conduct Research Development, scale assembly and test in our Singapore facility which is certified ISO9001 since year 2004.

We have established our optics fabrication facility since year 2003. The facility has been certified ISO9001 and 14000 since year 2006. Continuous investment on facility as well as production process and equipment has been made over the years. SPC and other tools are applied widely in factory quality and engineering management.

Training employee is high focus among our organization. From basic manufacturing skills to sophisticated capacity management system are provided in regular basis. We believe quality to customers is delivered from quality employee's hand. Thus we put training high priority in each year's agenda.

Maintaining business ethic such as honesty to customers, fairness to employees, respect to suppliers etc are cultivated in company culture. We emphasis on right fundamentals for long term organizational success.

Thanks for IR imaging industry's growth over the years. Customer demands for lenses with high resolution, stable performance over wide range of wavelength and temperature in a very competitive price. We are working on these challenges to meet the increasing demand. I believe Wavelength team will deliver to you solutions for your satisfaction.

I wish you enjoy reading our new product catalogue, and be successful in your business and career.

Robert Huang
Chief Executive Officer

"We do not believe in perfection as what is perfect today may not be tomorrow but only through constant innovation and re-invention can we strive for excellence"

Robert Huang, CEO

IR Dual Field Imaging Lens

IR Zoom Lens

Registration Schedule

SCOPE OF REGISTRATION

"Design, Assembly and Trading of Optical Components"

Company Name:	**WAVELENGTH TECHNOLOGY SINGAPORE PTE LTD**
Site(s) Registered:	Blk 2 Bukit Batok Street 24 #06-03 Skytech Building Singapore 659480
Standard:	**BS EN ISO 9001:2008**
EAC:	19, 29
Date of Re-Registration:	28th August 2010
Date of Expiry:	28th August 2013
Certificate Number:	AJA04/7893

UKAS QUALITY MANAGEMENT

Reg. No. 059

Joint Chief Executives, AJA Registrars

This Certificate has been issued by AJA Registrars Limited, Unit 6, Gordano Court, Gordano Gate Business Park, Serlert Close, Portishead, Bristol UK BS20 7FS

This certificate is the property of AJA Registrars and must be returned on request

Motorized Focus Lens

B31 Series

INTRODUCTION 1
Wavelength Technology 1
Aspheric Lens & Diffractive Lens 8
IR Optical Material 9-10
IR Window 11-12
IR Filter 13-15
IR Coating 16
IR Lens Design Request Form 17
Detector Request Form 18
***RONAR SMITH®* IR IMAGING LENS** 19
LSW Lens 900-1700nm 20
…….Part no.: LSW02514640 21
…….Part no.: LSW05014640 22
…….Part no.: LSW07515640 23
…….Part no.: LSW10020640 24
…….Part no.: LSW20024640 25
SWIR Lens 1-5µm
…….Part no.: IRSW0252064 26
…….Part no.: IRSW32.4-2.5 27
…….Part no.: IRSW100-2.0-640 28
MWIR Lens 2-5µm 29
…….Part no.: IRSM20-2.0-640 30
…….Part no.: IRSM25-2.0-640 31
…….Part no.: IRSM50-2.0-640 32
…….Part no.: IRSM5020384 33
…….Part no.: IRSM050201024 34
MWIR Lens 3-5µm
…….Part no.: IRM9.05-0.7-32 35
…….Part no.: IRM40-6.0-320 36
…….Part no.: IRM05020320 37
…….Part no.: IRM10020320 38
…….Part no.: IRM70-4.62-320 39
…….Part no.: IRM7-2.4-640 40
…….Part no.: IRM13-2.0-640 41
…….Part no.: IRM13-2.0-640 42
…….Part no.: IRM40-4.0-640 43
…….Part no.: IRM100-1.25-640 44
…….Part no.: IRM50-2.0-1280 45
…….Part no.: IRM32.4-2.5 46
LWIR Lens 8-12µm 47
…….Part no.: IR00920160 48

…….Part no.: IR03510160 49
…….Part no.: IR07510160 50
…….Part no.: IR10-0.8-320 51
…….Part no.: IR10.5-0.8-320 52
…….Part no.: IR12-0.85-320 53
…….Part no.: IR14-0.9-320 54
…….Part no.: IR18-0.9-320 55
…….Part no.: IR04008320 56
…….Part no.: IR05008320 57
…….Part no.: IR07510320 58
…….Part no.: IR10010320 59
…….Part no.: IR75-1.0-M24 60
…….Part no.: IR50-1.0-MOT 61
…….Part no.: IR250-1.1-320-MOT 62
…….Part no.: IR400-1.8-320-MOT 63
…….Part no.: IR35-1.0-320B-MOT 64
…….Part no.: IR50-1.0-320B-MOT 65
…….Part no.: IR75-1.0-320B-MOT 66
…….Part no.: IR50-1.0-320C-MOT 67
…….Part no.: IR75-1.0-320C-MOT 68
…….Part no.: IR100-1.0-320C-MOT 69
…….Part no.: IR4-1.0-320N 70
…….Part no.: IR5-1.0-320N 71
…….Part no.: IR6-1.0-320N 72
…….Part no.: IR14-1.0-320N 73
…….Part no.: IR50-1.0-320N 74
…….Part no.: IR17-1.0-320N-MOT 75
…….Part no.: IR25-1.0-320N-MOT 76
…….Part no.: IR35-1.0-320N-MOT 77
…….Part no.: IR50-1.0-320N-MOT 78
…….Part no.: IR75-1.0-320N-MOT 79
…….Part no.: IR75-1.2-320N-MOT 80
…….Part no.: IR2100-1.0-320N-MOT 81
…….Part no.: IR35-1.0-324 82
…….Part no.: IR35-1.3-324 83
…….Part no.: IR35-1.0-324-MOT 84
…….Part no.: IR90-1.1-360 85
…….Part no.: IR02510384G 86
…….Part no.: IR02510384-MOT 87
…….Part no.: IR03510384 88
……Part no.: IR14-0.9-384 89

.....Part no.: IR17-1.0-384 90
.....Part no.: IR25-1.0-384 91
.....Part no.: IR35-1.0-384 92
.....Part no.: IR50-1.0-384 93
.....Part no.: IR75-1.0-384 94
.....Part no.: IR75-1.4-384 95
.....Part no.: IR40-1.0-384-MOT 96
.....Part no.: IR250-0.8-MOT 97
.....Part no.: IR37.5-2.0-640 98
.....Part no.: IR50-1.0-640 99
.....Part no.: IR50-1.0-640D 100
.....Part no.: IR50-1.0-640D-1 101
.....Part no.: IR75-1.4-640 102
.....Part no.: IR75.3-2.5-640 103
.....Part no.: IR150-1.0-640D 104
.....Part no.: IR07514640 105
.....Part no.: IR10020640 106
.....Part no.: IR10020640-B 107
.....Part no.: IR10020640-B-MOT 108
.....Part no.: IR0180640-B31-MOT 109
.....Part no.: IR05008640-B31-MOT 110
.....Part no.: IR07510640-B31-MOT 111
.....Part no.: IR10010640-B31-MOT 112
.....Part no.: IR15010640-B31-MOT 113
.....Part no.: IR25-1.0-4500 114
.....Part no.: IR50-0.8-4500-MOT 115
.....Part no.: IR75-1.0-4500-MOT 116
.....Part no.: IR100-1.0-4500-MOT 117
.....Part no.: IR150-1.0-4500-MOT 118
.....Part no.: IR50-1.0-1024 119
IR2FV Lens Dual Field View **120**
.....Part no.: IRM2FV15050 121
.....Part no.: IR2FV18060 122
.....Part no.: IR2FV07522 123-124
.....Part no.: IR2FV143-35.75-384 125-126
.....Part no.: IR2FV15050 127-128
.....Part no.: IR2FV17644 129-130
IR Zoom Lens **131**
.....Part no.: IRZ88176830 132
.....Part no.: IRZ10010320 133
.....Part no.: IRZ25110320 134-135

…….Part no.: IRZ44176320 136-137
…….Part no.: IRZ331004500 138-139
IR Athermal Lens **140**
…….Part no.: IRMA13020320 141
…….Part no.: IRA03514320 142
…….Part no.: IRA07510648 143
IR Objective Lens **144**
Motorized & Computerized **145**

Aspheric lens

Aspheric lens can be applied to reduce spherical aberration and other optical aberrations, especially in complex lens system, one single aspheric lens will replace multiple lenses, it will make optical system more compact and cost reduced. We provide aspheric lens made by crystal material ZnSe , ZnS, Ge, Si and glass material as well.

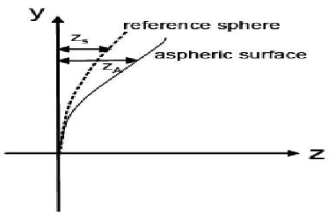

$$Z_{A,E} = \frac{cr^2}{1+\sqrt{1-(1+k)c^2r^2}} + a_1r^2 + a_2r^4 + a_3r^6 + a_4r^8 + \cdots$$

Specification	Tolerance	Comment
Diameter	Up to +0 / -.05mm	
Center thickness	Up to ± .05mm	
Form error/Irregularity	Up to 1 micron	
(peak to valley)	Up to 1/8 wave	
Base radius (In addition to form error) *	Up to 1 micron	* Tolerance given in terms of the sag difference across the aperture.
Centration	Up to 1’	
Surface quality	Up to 40/20	

Diffractive lens

Diffractive lenses can be used to reduce the number of elements in conventional lens systems and eliminate the need for unusual materials in correcting chromatic aberrations.

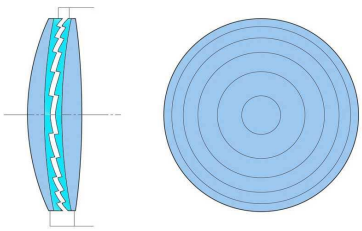

Diffractive lenses are very thin elements with total depth height equal to $\lambda/(n - 1)$, where λ is the operating wavelength and n is the index of refraction. A diffractive lens is composed of a series of zones that become finer towards the edge of the lens.

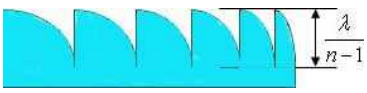

IR Optical Material

CALCIUM FLUORIDE (CaF_2)	
Transmission Range (um)	0.13-10
Refractive Index@5um	1.39908
Temperature Coefficient of Refractive Index, /°C	18.85 x 10^{-6}
Melting Point, °C	1360
Hardness (Knoop), Kg/mm^2	158.3
Density, g/cm^3	3.18
Young's Modulus, GPa	75.8

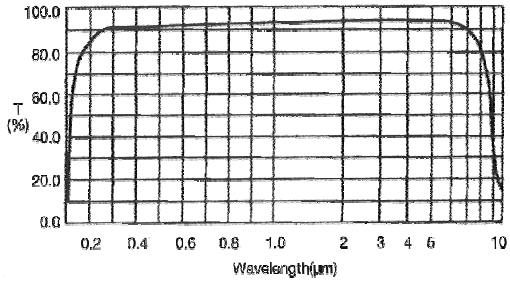

MAGNESIUM FLUORIDE (MgF_2)	
Transmission Range (um)	0.11-7.5
Refractive Index, n_0/n_e @0.405um	1.3836/1.3957
Temperature Coefficient of Refractive Index, /°C	13.7/8.48 x 10^{-6}
Melting Point, °C	1255
Hardness (Knoop), Kg/mm^2	415
Density, g/cm^3	3.177
Young's Modulus, GPa	138.5

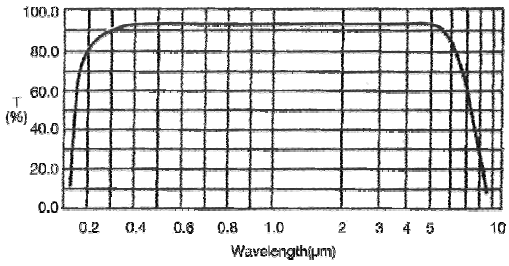

GALLIUM ARSENIDE (GaAs)	
Transmission Range (um)	1-22
Refractive Index@10um	3.277
Temperature Coefficient of Refractive Index, /°C	149 x 10^{-6}
Melting Point, °C	1600
Hardness (Knoop), Kg/mm^2	750
Density, g/cm^3	5.37
Young's Modulus, GPa	8.3

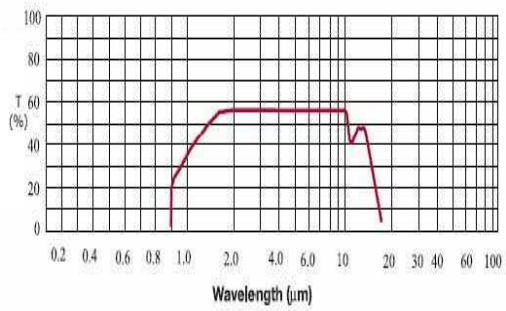

SAPPHIRE (Al_2O_3)	
Transmission Range (um)	0.15-5.5
Refractive Index@1.0139um	1.755
Temperature Coefficient of Refractive Index, /°C	8.4 x 10^{-6}
Melting Point, °C	2040
Hardness (Knoop), Kg/mm^2	2000
Density, g/cm^3	3.97
Young's Modulus, GPa	335

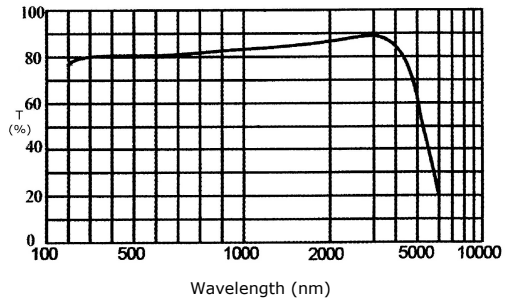

GERMANIUM (Ge)	
Transmission Range (um)	1.8-23
Refractive Index@10um	4.0034
Temperature Coefficient of Refractive Index, /°C	5.5-6.1 x 10^{-6}
Melting Point, °C	936
Hardness (Knoop), Kg/mm^2	780
Density, g/cm^3	5.327

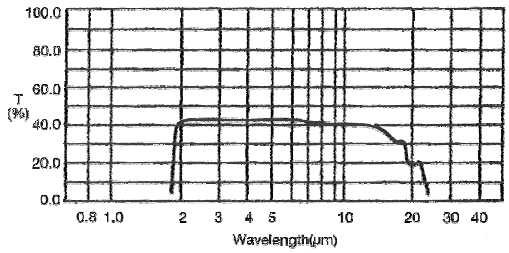

IR Optical Material

ZINC SULPHIDE (ZnS)	
Transmission Range (um)	0.37-14
Refractive Index@10um	2.2008
Temperature Coefficient of Refractive Index, /°C	50×10^{-6}
Melting Point, °C	1830
Hardness (Knoop), Kg/mm^2	250
Density, g/cm^3	4.09
Young's Modulus, GPa	74.5

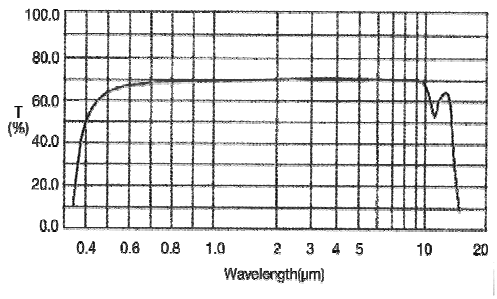

ZINC SELENIDE (ZnSe)	
Transmission Range (um)	0.5-22
Refractive Index@10.6um	2.4028
Temperature Coefficient of Refractive Index, /°C	7.8×10^{-6}
Melting Point, °C	1525
Hardness (Knoop), Kg/mm^2	120
Density, g/cm^3	5.27
Young's Modulus, GPa	67.22

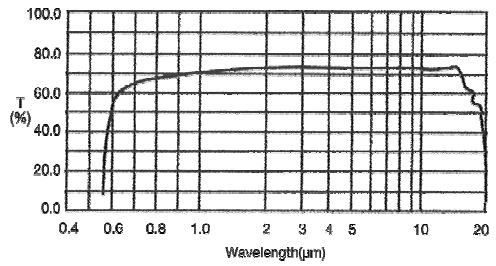

Silicon (Si)	
Transmission Range (um)	1.2-8
Refractive Index@3um	3.432
Temperature Coefficient of Refractive Index, /°C	2.6×10^{-6}
Melting Point, °C	1414
Hardness (Knoop), Kg/mm^2	1100
Density, g/cm^3	2.33
Young's Modulus, GPa	130.91

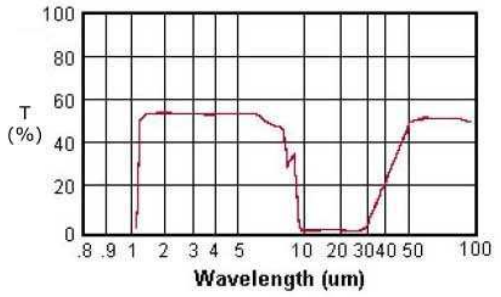

IR Window

NOTE: Windows of special sizes and materials are vailable upon request.

Germanium Window is ideal for thermal imaging applications and is popular for its high refraction index at about 4.0 from 2 to 14μm.

Specifications	
Diameter Tolerance:	+0.0, -0.2 mm
Thickness Tolerance:	±0.2mm
Clear Aperture:	>80%
Parallelism:	<3 arc min
Surface Quality:	40-20 scratch and dig
Flatness	λ /2 @632.8nm per 25mmDia

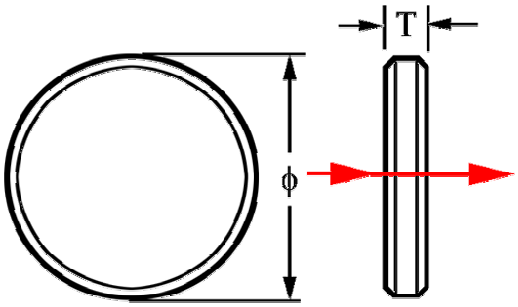

Part No:	Material	Diameter	Thickness	Wavelength (μm)
WGE-25-3-BB	Ge	25.0	3.0	8-12
WGE-25.4-1-BB	Ge	25.4	1.0	8-12
WGE-26-2-BB	Ge	26.0	2.0	8-12
WGE-30-3-BB	Ge	30.0	3.0	8-12
WGE-1.5-2-BB	Ge	38.1	2.0	8-12
WGE-1.5-3-BB	Ge	38.1	3.0	8-12
WGE-1.5-5-BB	Ge	38.1	5.0	8-12
WGE-40-2-BB	Ge	40.0	2.0	8-12
WGE-40-3-BB	Ge	40.0	3.0	8-12
WGE-45-3-BB	Ge	45.0	3.0	8-12
WGE-48-3-BB	Ge	48.0	3.0	8-12
WGE-2-3-BB	Ge	50.8	3.0	8-12
WGE-55-5-BB	Ge	55.0	5.0	8-12
WGE-75-2.5-BB	Ge	75.0	2.5	8-12
WGE-76X76X2-BB	Ge	76*76	2.0	8-12
WGE-80-3-BB	Ge	80.0	3.0	8-12
WGE-90-2.5-BB	Ge	90.0	2.5	8-12
WGE-100-3-BB	Ge	100.0	3.0	8-12
WGE-110-4-BB	Ge	110.0	4.0	8-12
WGE-120-4-BB	Ge	120.0	4.0	8-12

IR Window

Part No:	Material	Diameter	Thickness	Wavelength (μm)
WGE-124-4-BB	Ge	124.0	4.0	8-12
WGE-150-15-BB	Ge	150.0	15.0	8-12
WGE-150X130X4-BB	Ge	150*130	4.0	8-12
WGE-152X120X6.54-BB	Ge	152*120	6.54	8-12
WGE-156-6-BB	Ge	156.0	6.0	8-12
WGE-178-6-BB	Ge	178.0	6.0	8-12
WGE-215X155X8-BB	Ge	215*155	8.0	8-12
WGE-2-3-BB3-5	Ge	50.8	3.0	3-5
WGE-142-6-BB3-5	Ge	142.0	6.0	3-5

Where,• α is angle of incidence
• n is index of refraction
• t is thickness
• d is displacement of the material

* For customized windows, please send your enquires to us.

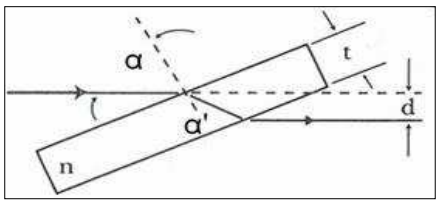

$$d = t \sin \alpha \left(1 - \frac{\cos \alpha}{n \cos \alpha'}\right)$$

IR Filter

IR Narrow Bandpass Filter

Substrate Material: Sapphire
Diameter or Width (mm): φ20x1.0,φ10x1.0,φ10x0.5
Thickness (mm): 0.5±0.05

Spectrum
Center Wavelength (μm) = 4.26±0.02
Tpeak≥80%
Nominal FWHM (μm)=0.08±0.02
Out of band blocking (form UV to detector limit standard): Tmax<1%Tavg<0.1%

Available size of substrate			
Substrate Material	Substrate Size (mm)	Substrate Material	Substrate Size (mm)
Ge	φ24x2.5	Si	φ101.6x0.5
	φ16x1.0		φ100x0.5
Gemstone	φ20x1.0		φ50.8x1.0
	φ10x1.0		φ25.4x0.5
	φ30x1.0		φ25x0.5
Bk7	φ30x1.0		φ20x1.0
	φ16x1.0		φ16x1.0
	φ16x0.5		φ10x1.0
Fused Silica	φ10x1.0	ZnS	φ28x1.4

Performance

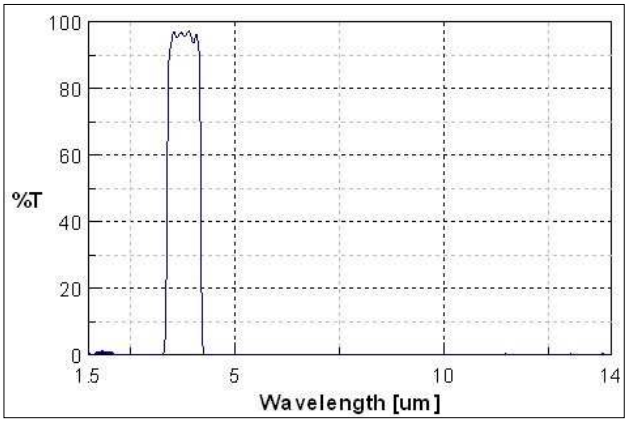

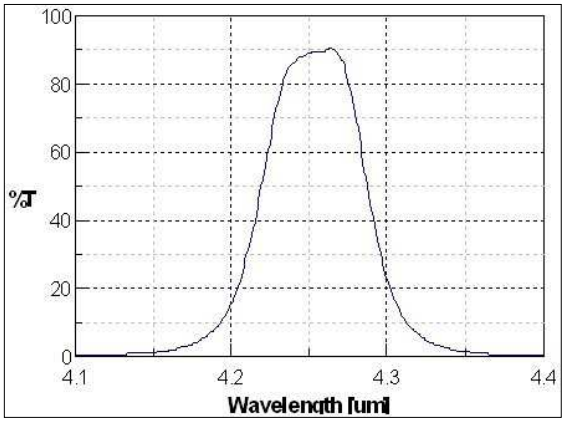

IR Filter

IR Wde Bandpass Filter (3.8μm)

Substrate Material: Sapphire
Diameter or Width (mm): φ20x1.0,φ10x1.0,φ10x0.5
Thickness (mm): 0.5±0.05

Spectrum
Center Wavelength (μm) = 3.8±2%μm
3.45~4.15μm: Tavg≥90%
Half Power Points = 3.42±2%μm and 4.2±2%μm

Performance

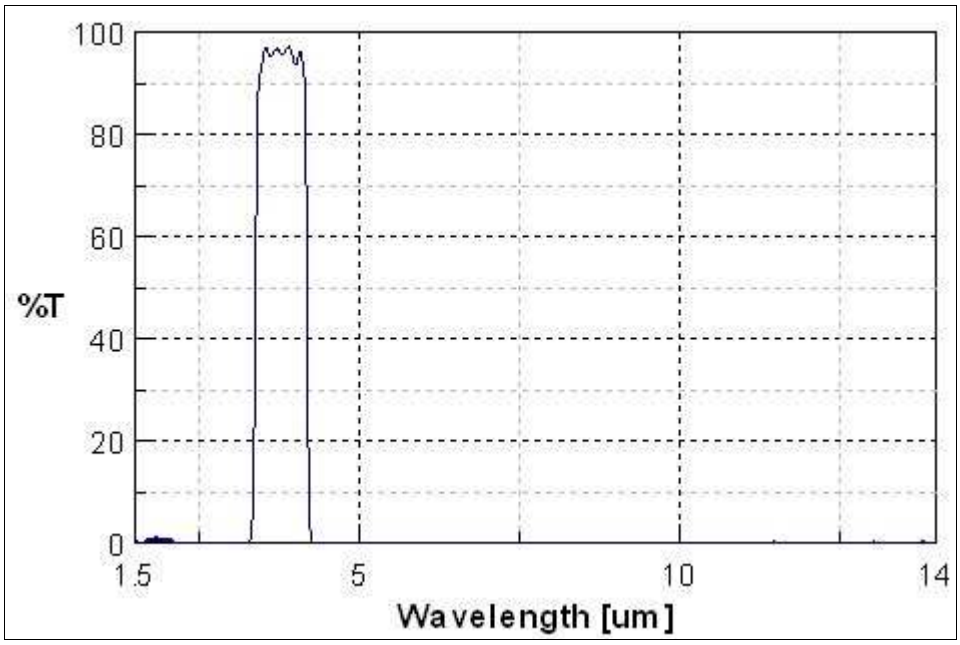

IR Filter

IR Long Bandpass Filter (7.2μm)

Substrate Material: Germanium
Diameter or Width (mm): φ24x2.5, φ16x1.0
Thickness (mm): 2±0.2

Spectrum
7.5~11μm: Tavg>90%, Tmin>80%
1.5~7.2μm: Tmax<3%

Performance

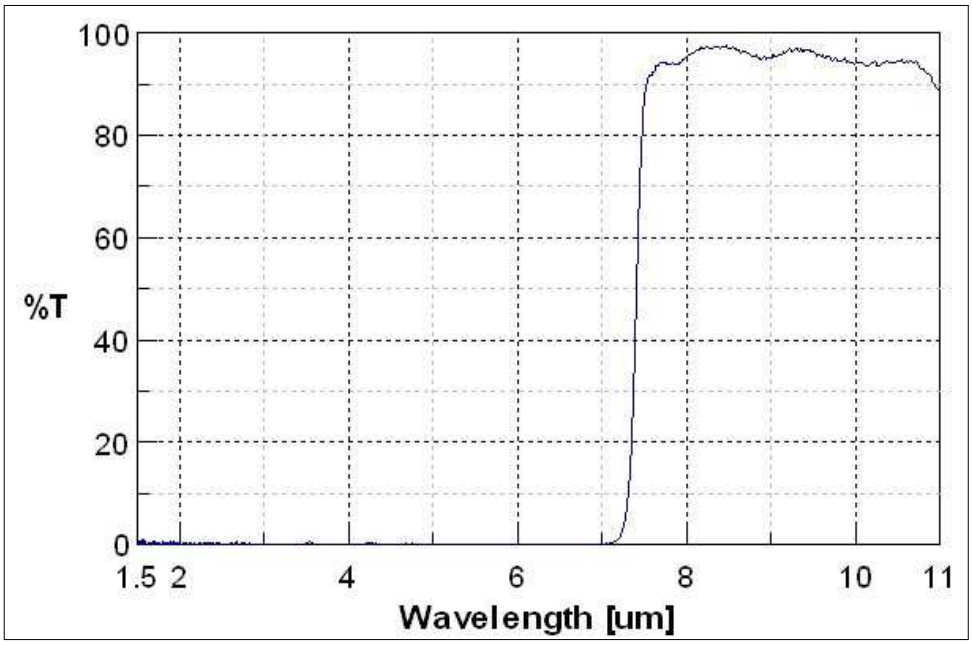

IR Coating

INFRARED BROADBAND (AR) COATING

Incident: 0° or 45°
Reflectance: Rave ≤0.5 @ 0°
Rave ≤1.0% @ 45°
Durability:Meet adhesion and abrasion per MIL-C-675

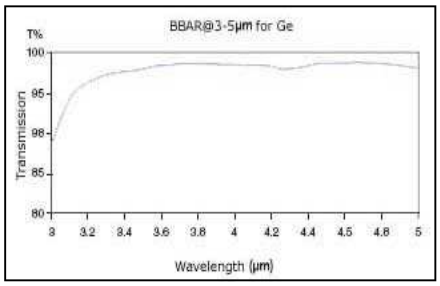

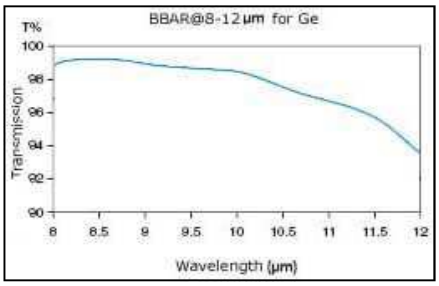

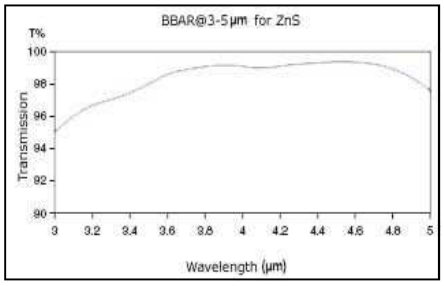

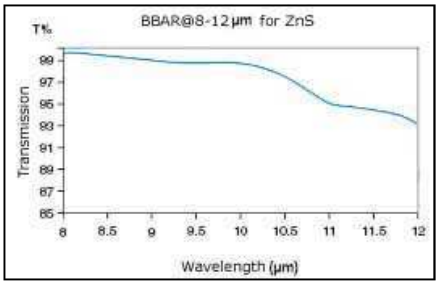

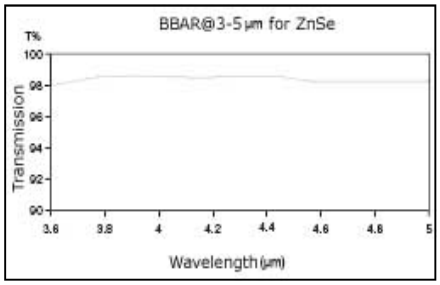

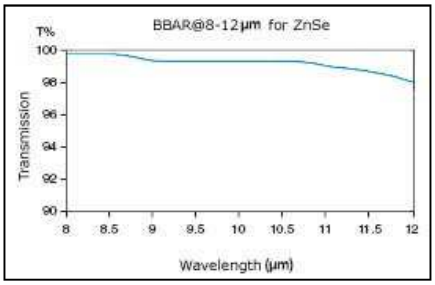

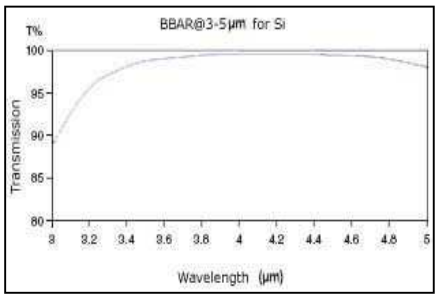

IR lens Optical Design Request Form

Opto-Mechanic Property	Specification	Remarks
Primary Request		
Spectral Range		
Number of FOV's		Single FOV/ Dual FOV/Zoom
Focal Length		
Field of View		
Number		
Back Focus Distance		Distance from the last lens surface to FPA
Focus Range		
Average Transmission		
Nominal Object Distance		If not specified, is infinity
Lenses Size		
Coating		DLC Coating Yes/No
Detector Type		Cool/Uncool
FPA Parameter		
Window Parameter		Material/Thickness
Operating Temperature		
Special Request for Cooled Detectors		
Cold Shield Diameter		Attached drawing for cool detector parameter if possible.
Height between Cold Shield and FPA		
Filter		Material/Thickness/Position/Spectral Range
Other Request		

Detector Request Form:

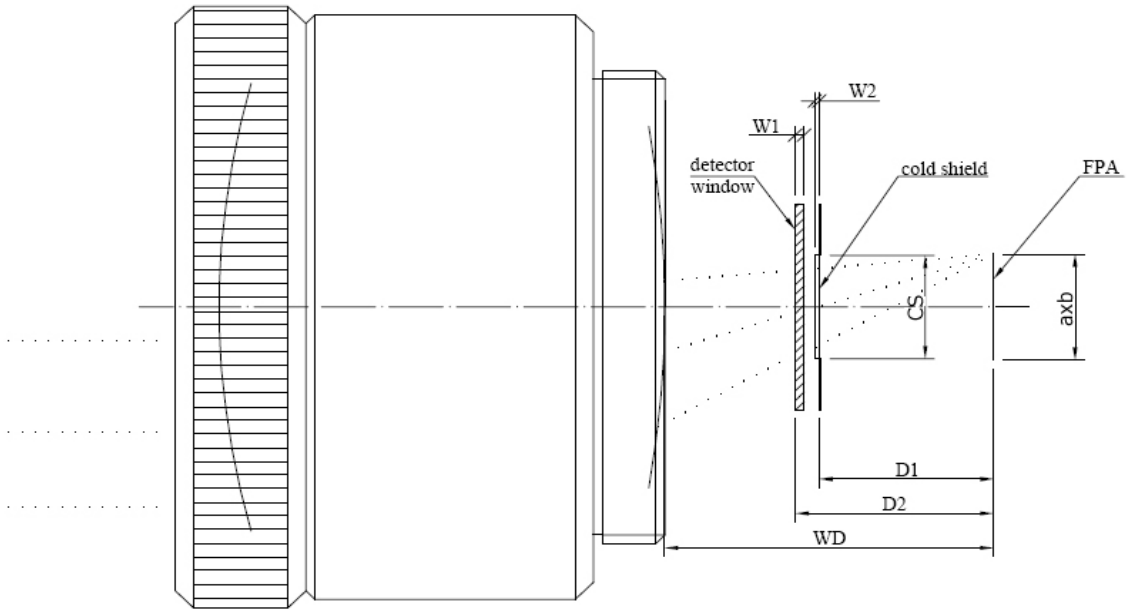

Detector	D1	D2	CS	WD	W1	W2	axb

RONAR SMITH® IR IMAGING LENS

Wavelength Technology offers variety of IR Lens for defense, medical and surveillance application. Our premier range of IR lens for cooled and uncooled camera system includes:

- LSW Lens (900-1700nm)
- SWIR Lens (1-5μm)
- MWIR Lens (2-5μm)
- MWIR Lens (3-5μm)
- LWIR Lens (8-12μm)

Besides above, we also offers high end sophisticated lens includes:

- IR2FV Lens Dual Field View
- IR Zoom Lens
- IR Athermal Lens
- Motorized and Computerized

Wavelength Technology manufacturing capability includes aspheric surface diamond turning, high speed spherical polishing, hard carbon coating DLC and HCC, high efficiency AR coating. Our assembly and testing are qualified by MIL and ISO requirement.

LSW Lens 900-1700nm

Shortwave Infrared wavelength band offers a unique imaging advantages over visible and other thermal bands. So it is quietly earning a growing place in industrial machine vision for quality inspection and in military applications.

SWIR lenses are utilized where other detectors or cameras are not sensitive enough for the finite detail recognition.

So here in Wavelength Technology, we have come up with our LSW lenses (SWIR) which are designed to meet the latest advancement in SWIR technology. Our designed is for high resolution operation at low light level. It also offers a superior image quality, better transmission and performance. LSW lenses function in the wavelengths of 900nm-1700nm with the detector size of 20mm diagonal and pixel size of 25µm.

The following is the MTF performance for LSW05014640

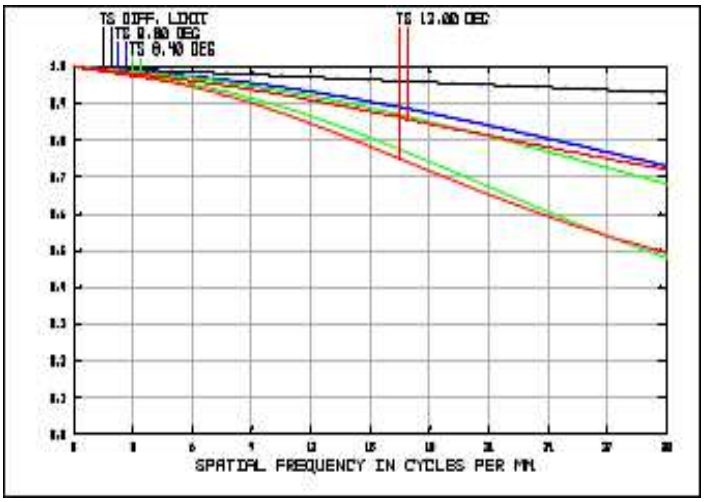

MTF Diagram

Our LSW lens design can be customized as per your requirement or selection from our available designs.

Applications:

LSW Lens are used in industrial, military applications, portable and unmanned aerial vehicle applications. It is extensively utilize in quality inspection and tracking.

LSW Lens 900-1700nm

NEW

Part no.: LSW02514640

Opto-Mechanic Property	Specification	Remarks
Focal Length	25mm	
F#	1.4	
Wavelength	900-1700nm	
Image Diagonal	20mm	
Average Transmission	90%	
Circular FOV	43.6°	
Back Focus Distance	13.526mm	
Back Working Distance	4.383mm	
Dimensions	Length53.5mm, Φ63mm	
Focus Type	Manual Focus	
Focus Range	1m to infinity	
Mount Type	25.4-32TPI	
Detector	640*480pixels, 25μm	
Weight	-	
Environmental		
Operating Temperature	-30°C to +60°C	
Storage Temperature	-40°C to +80°C	
External Coating	AR	Anti-Reflection Coating
Humidity	100%RH at 26°C and 74%RH at 35°C for 24 hours	

Drawing

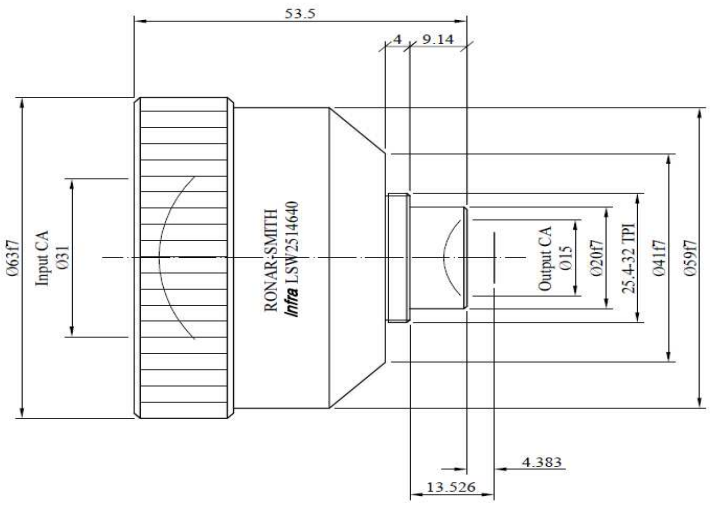

LSW Lens 900-1700nm

Part no.: LSW05014640

Opto-Mechanic Property	Specification	Remarks
Focal Length	50mm	
F#	1.4	
Wavelength	900-1700nm	
Image Diagonal	20mm	
Average Transmission	90%	
Circular FOV	22.6°	
Back Focus Distance	21.76mm	
Back Working Distance	6.76mm	
Dimensions	Length77mm, Φ72mm	
Focus Type	Manual Focus	
Focus Range	1m to infinity	
Mount Type	M37*0.5	
Detector	640*480pixels, 25μm	
Weight	-	
Environmental		
Operating Temperature	-30°C to +60°C	
Storage Temperature	-40°C to +80°C	
External Coating	AR	Anti-Reflection Coating
Humidity	100%RH at 26°C and 74%RH at 35°C for 24 hours	

Drawing

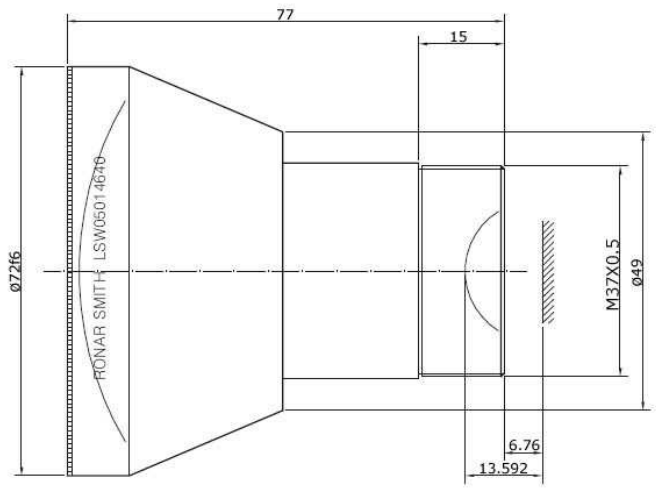

LSW Lens 900-1700nm

Part no.: LSW07515640

Opto-Mechanic Property	Specification	Remarks
Focal Length	75mm	
F#	1.5	
Wavelength	900-1700nm	
Image Diagonal	20mm	
Average Transmission	90%	
Circular FOV	15.2°	
Back Focus Distance	17.53mm	
Back Working Distance	13.73mm	
Dimensions	Length130.7mm, Φ90mm	
Focus Type	Manual Focus	
Focus Range	2m to infinity	
Mount Type	25.4 -32teeth/inch	
Detector	640*480pixels, 25μm	
Weight	-	
Environmental		
Operating Temperature	-30°C to +60°C	
Storage Temperature	-40°C to +80°C	
External Coating	AR	Anti-Reflection coating
Humidity	100%RH at 26°C and 74%RH at 35°C for 24 hours	

Drawing

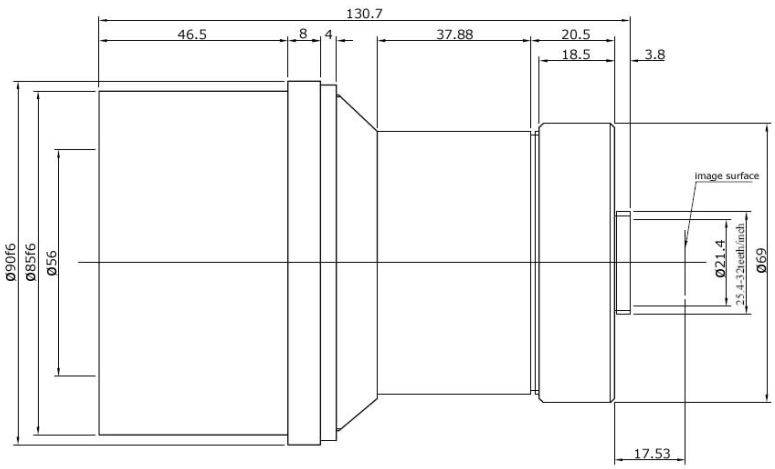

LSW Lens 900-1700nm

Part no.: LSW10020640

Opto-Mechanic Property	Specification	Remarks
Focal Length	100mm	
F#	2.0	
Wavelength	900-1700nm	
Image Diagonal	20mm	
Average Transmission	90%	
Circular FOV	11.4°	
Back Focus Distance	17.53mm	
Back Working Distance	14.03mm	
Dimensions	Length126.58mm, Φ63mm	
Focus Type	Manual Focus	
Focus Range	2m to infinity	
Mount Type	25.4-32teeth/inch	
Detector	640*480pixels, 25μm	
Weight	-	
Environmental		
Operating Temperature	-30°C to +60°C	
Storage Temperature	-40°C to +80°C	
External Coating	AR	Anti-Reflection coating
Humidity	100%RH at 26°C and 74%RH at 35°C for 24 hours	

Drawing

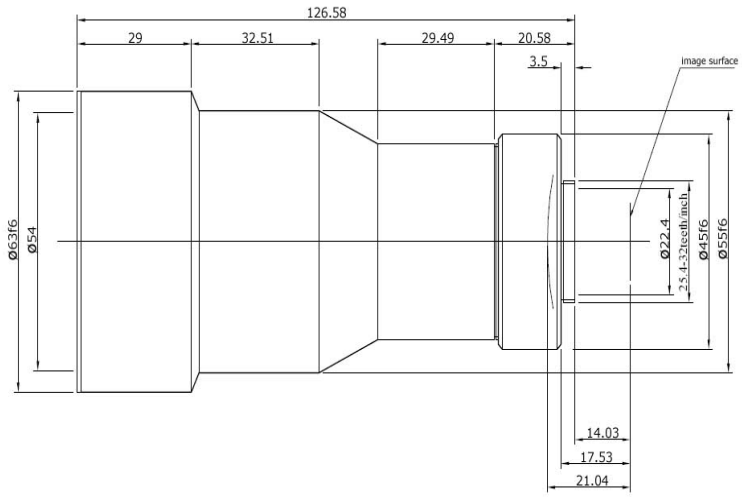

LSW Lens 900-1700nm

NEW

Part no.: LSW20024640

Opto-Mechanic Property	Specification	Remarks
Focal Length	200mm	
F#	2.4	
Wavelength	900-1700nm	
Image Diagonal	20mm	
Average Transmission	90%	
Circular FOV	5.7°	
Back Focus Distance	17.526mm	
Back Working Distance	12.526mm	
Dimensions	Length200.39mm, Φ110mm	
Focus Type	Manual Focus	
Focus Range	2m to infinity	
Mount Type	1”-32teeth/inch	
Detector	640*480pixels, 25μm	
Weight	-	
Environmental		
Operating Temperature	-30°C to +60°C	
Storage Temperature	-40°C to +80°C	
External Coating	AR	Anti-Reflection coating
Humidity	100%RH at 26°C and 74%RH at 35°C for 24 hours	

Drawing

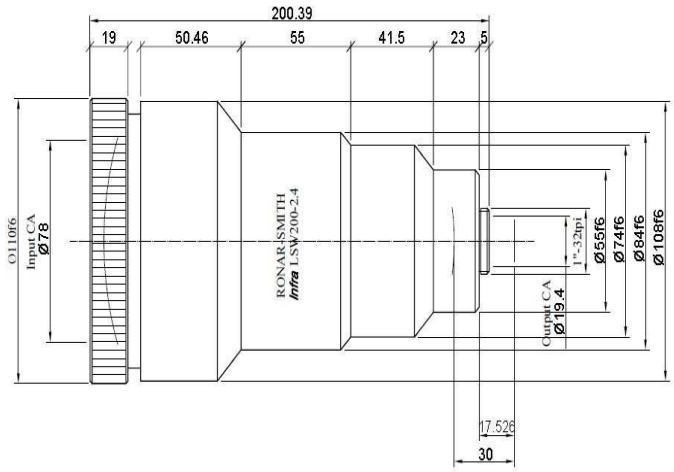

SWIR Lens 1-3µm

NEW

Part no.: IRSW32.4-2.5

Opto-Mechanic Property	Specification	Remarks
Focal Length	32.4mm	
F#	1.0	
Wavelength	1µm-3µm	
Image Diagonal	-	
Average Transmission	>85%	
Circular FOV	2.5°	
Back Focus Distance	-	
Back Working Distance	10mm	
Dimensions	Length 24mm, Φ41mm	
Focus Type	Fixed Focus	
Focus Range	-	
Mount Type	M41*0.75	
Detector	-	Not for FPA detector
Weight	-	
Environmental		
Operating Temperature	-30°C to +60°C	
Storage Temperature	-40°C to +80°C	
External Coating	AR	Anti-Reflection coating
Humidity	100%RH at 26°C and 74%RH at 35°C for 24 hours	

Drawing

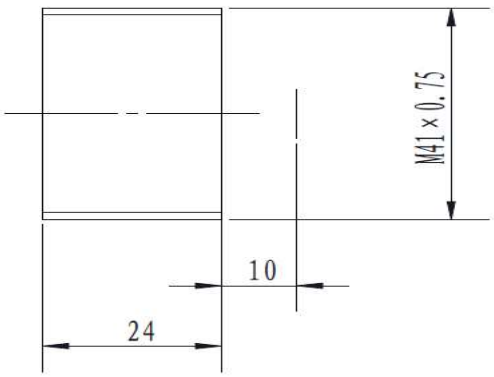

SWIR Lens 1-3μm

NEW

Part no.: IRSW0252064

Opto-Mechanic Property	Specification	Remarks
Focal Length	25mm	
F#	2.0	
Wavelength	1.2μm-3.4μm	
Image Diagonal	3.2mm	
Average Transmission	>90%	
Circular FOV	7.3°	
Back Focus Distance	12.94mm	
Back Working Distance	8.94mm	
Dimensions	Length 43mm, Φ46mm	
Focus Type	Manual Focus	
Focus Range	2m to infinity	
Mount Type	1”-32teeth/inch	
Detector	64*64pixels, 50μm	
Weight	140g	
Environmental		
Operating Temperature	-30°C to +60°C	
Storage Temperature	-40°C to +80°C	
External Coating	AR	Anti-Reflection coating
Humidity	100%RH at 26°C and 74%RH at 35°C for 24 hours	

Drawing

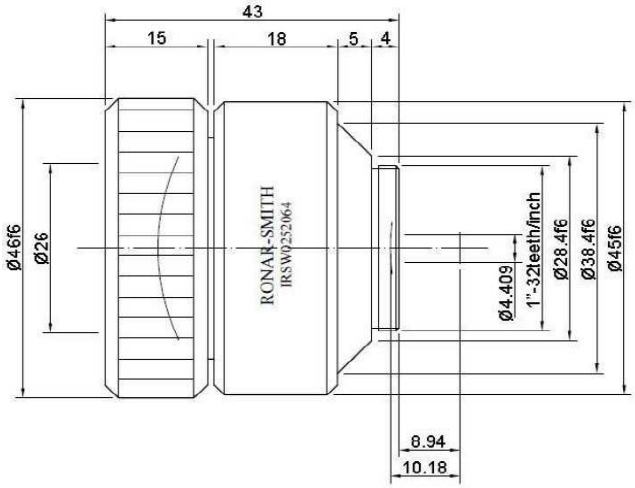

SWIR Lens 1-5µm

NEW

Part no.: IRSW100-2.0-640

Opto-Mechanic Property	Specification	Remarks
Focal Length	100mm	
F#	2.0	
Wavelength	1.5µm-5µm	
Image Diagonal	12.3mm	
Average Transmission	90%	
Circular FOV	7°	
Back Focus Distance	59mm	
Back Working Distance	54mm	
Dimensions	Length 97mm, Φ110mm	
Focus Type	Manual Focus	
Focus Range	2m to infinity	
Mount Type	M70*1	
Detector	640*512pixels, 15µm	
Weight	-	
Environmental		
Operating Temperature	-30°C to +60°C	
Storage Temperature	-40°C to +80°C	
External Coating	AR	Anti-Reflection coating
Humidity	100%RH at 26°C and 74%RH at 35°C for 24 hours	

Drawing

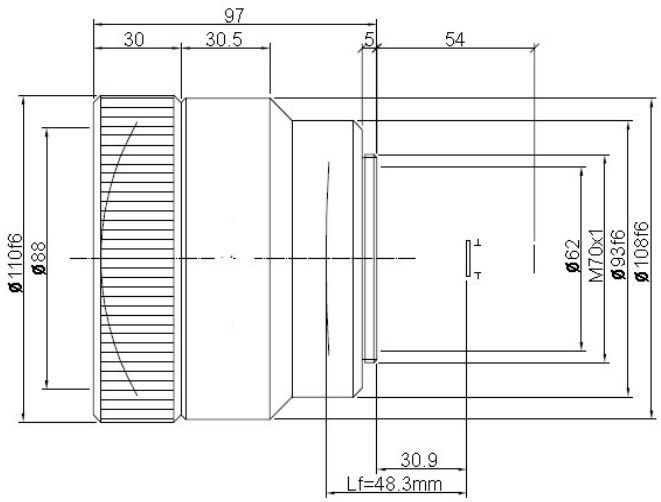

MWIR Lens

Wavelength Mid-wave (MWIR) lenses feature cooled technology, which offers very high sensitivity and better transmission.

We have our standard design but we also offer customized design to meet our customer needs.

These lenses include EFL from 25mm to 100m and function in the wavelengths of 2 - 5µm and 3 - 5µm. The F number is 2. The lenses also cover various detector sizes from 15.36x12.29 to 320x240 pixels.

The outer most lens is coated with Hard Diamond coating and mounted with aluminum mounts. The MTF profile is shown in the following.

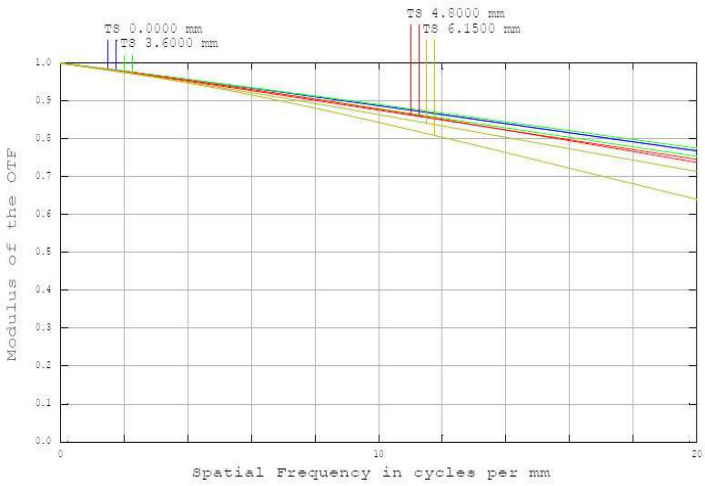

MTF Diagram

Applications:

MWIR Lens are used in manufacturing and in critical military applications.

MWIR Lens 2-5µm

NEW

Part no.: IRSM20-2-640

Opto-Mechanic Property	Specification	Remarks
Focal Length	20mm	
F#	2.0	
Wavelength	2µm—5µm	
Image Diagonal	12.3mm	
Average Transmission	>85%	
Circular FOV	34.19°	
Back Focus Distance	35.6mm	
Back Working Distance	32.98mm	
Dimensions	Length50mm, Φ48mm	
Focus Type	Manual Focus	
Focus Range	-	
Mount Type	M40*0.75	
Detector	640*512pixels, 15µm	
Weight	-	
Environmental		
Operating Temperature	-30°C to +60°C	
Storage Temperature	-40°C to +80°C	
External Coating	DLC	Diamond like coating
Humidity	100%RH at 26°C and 74%RH at 35°C for 24 hours	

Drawing

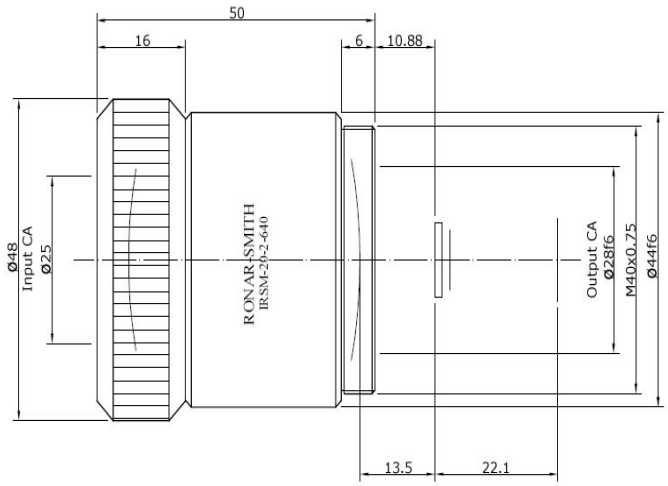

MWIR Lens 2-5um

NEW

Part no.: IRSM25-2.0-640

Opto-Mechanic Property	Specification	Remarks
Focal Length	25mm	
F#	2.0	
Wavelength	2µm—5µm	
Image Diagonal	12.3mm	
Average Transmission	>90%	
Circular FOV	27.64°	
Back Focus Distance	45.01mm	
Back Working Distance	37.01mm	
Dimensions	Length54.5mm, Φ69mm	
Focus Type	Manual Focus	
Focus Range	-	
Mount Type	M55*0.75	
Detector	640*512pixels, 15µm	
Weight	-	
Environmental		
Operating Temperature	-30°C to +60°C	
Storage Temperature	-40°C to +80°C	
External Coating	AR	Anti-Reflection coating
Humidity	100%RH at 26°C and 74%RH at 35°C for 24 hours	

Drawing

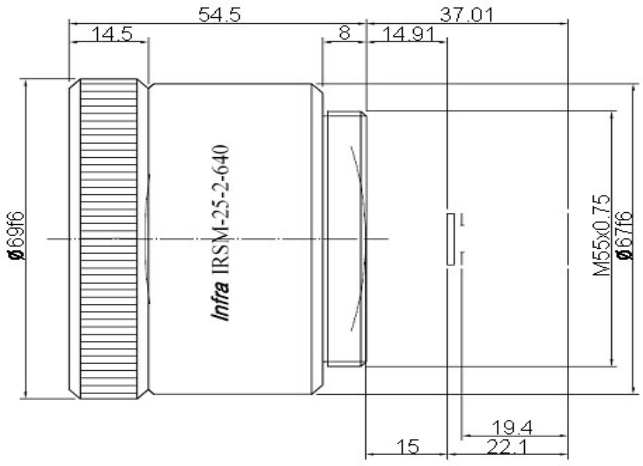

MWIR Lens 2-5um

NEW

Part no.: IRSM50-2.0-640

Opto-Mechanic Property	Specification	Remarks
Focal Length	50mm	
F#	2.0	
Wavelength	2μm—5μm	
Image Diagonal	12.3mm	
Average Transmission	>90%	
Circular FOV	14°	
Back Focus Distance	43.06mm	
Back Working Distance	36.56mm	
Dimensions	Length55mm, Φ70mm	
Focus Type	Manual Focus	
Focus Range	-	
Mount Type	M50*0.75	
Detector	640*512pixels, 15μm	
Weight	-	
Environmental		
Operating Temperature	-30°C to +60°C	
Storage Temperature	-40°C to +80°C	
External Coating	AR	Anti-Reflection coating
Humidity	100%RH at 26°C and 74%RH at 35°C for 24 hours	

Drawing

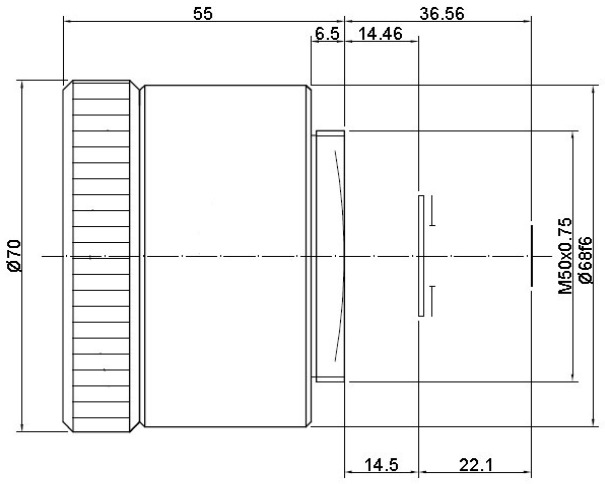

MWIR Lens 2-5um

NEW

Part no.: IRSM5020384

Opto-Mechanic Property	Specification	Remarks
Focal Length	50mm	
F#	2.0	
Wavelength	2µm—5µm	
Image Diagonal	16.8mm	
Average Transmission	>85%	
Circular FOV	19.07°	
Back Focus Distance	11.6mm	
Back Working Distance	7.6mm	
Dimensions	Length48.9mm, Φ50mm	
Focus Type	Manual Focus	
Focus Range	-	
Mount Type	1”-32 TPI	
Detector	384*288pixels, 35µm	
Weight	-	
Environmental		
Operating Temperature	-30°C to +60°C	
Storage Temperature	-40°C to +80°C	
External Coating	DLC	Diamond like coating
Humidity	100%RH at 26°C and 74%RH at 35°C for 24 hours	

Drawing

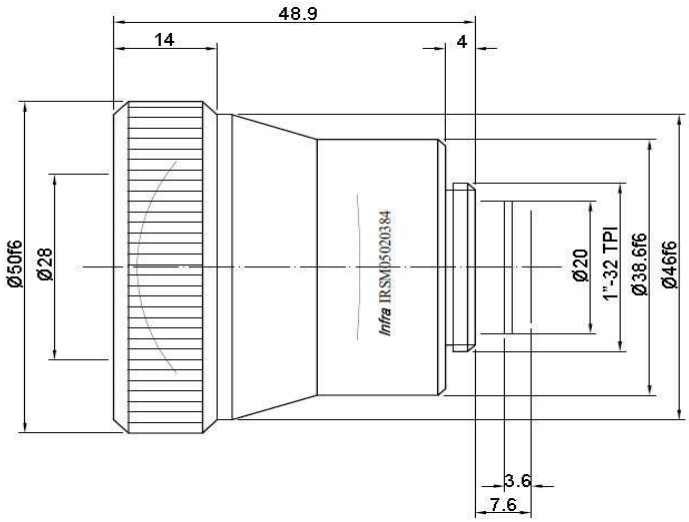

MWIR Lens 2-5um

Part no.: IRM050201024

Opto-Mechanic Property	Specification	Remarks
Focal Length	50mm	
F#	2.0	
Wavelength	2μm—5μm	
Image Diagonal	19.67mm	
Average Transmission	>95%	
Circular FOV	22.3°	
Back Focus Distance	56.52mm	
Back Working Distance	45.52mm	
Dimensions	Length70mm, Φ48mm	
Focus Type	Manual Focus	
Focus Range	100m to infinity	
Mount Type	M48*0.75	
Detector	15.36*12.29pixels, 15μm	
Weight	-	
Environmental		
Operating Temperature	-30°C to +60°C	
Storage Temperature	-40°C to +80°C	
External Coating	DLC	Diamond like coating
Humidity	100%RH at 26°C and 74%RH at 35°C for 24 hours	

Drawing

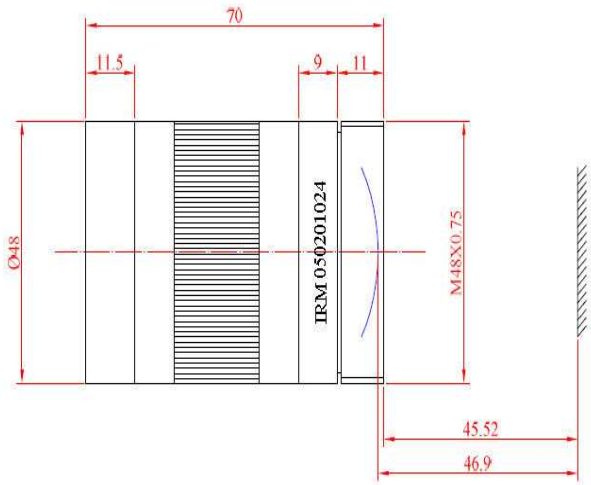

MWIR Lens 3-5μm

NEW

Part no.: IRM9.05-0.7-32

Opto-Mechanic Property	Specification	Remarks
Focal Length	9.05mm	
F#	0.7	
Wavelength	3μm—5μm	
Image Diagonal	4.5mm	
Average Transmission	>90%	
Circular FOV	20°	
Back Focus Distance	-	
Back Working Distance	5mm	
Dimensions	Length14.2mm, Φ26mm	
Focus Type	Fixed Focus	
Focus Range	-	
Mount Type	M26*0.75	
Detector	32*32pixels, 100μm	
Weight	-	
Environmental		
Operating Temperature	-20°C to +60°C	
Storage Temperature	-40°C to +80°C	
External Coating	AR	Anti-Reflection coating
Humidity	100%RH at 26°C and 74%RH at 35°C for 24 hours	

Drawing

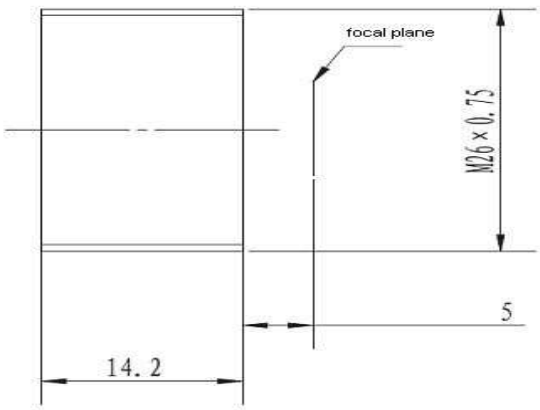

MWIR Lens 3-5µm

NEW

Part no.: IRM40-6.0-320

Opto-Mechanic Property	Specification	Remarks
Focal Length	40mm	
F#	6.0	
Wavelength	3µm—5µm	
Image Diagonal	12.3mm	
Average Transmission	>85%	
Circular FOV	17.48°	
Back Focus Distance	-	
Back Working Distance	36.15mm	
Dimensions	Length30mm, Φ38mm	
Focus Type	Fixed Focus	
Focus Range	-	
Mount Type	-	
Detector	320*256pixels, 30µm	
Weight	-	
Environmental		
Operating Temperature	-20°C to +60°C	
Storage Temperature	-40°C to +80°C	
External Coating	DLC	Diamond like coating
Humidity	100%RH at 26°C and 74%RH at 35°C for 24 hours	

Drawing

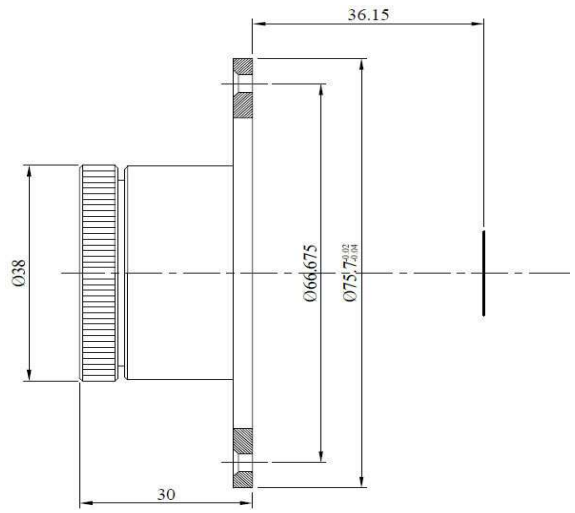

MWIR Lens 3-5μm

Part no.: IRM05020320

Opto-Mechanic Property	Specification	Remarks
Focal Length	50mm	
F#	2.0	
Wavelength	3μm—5μm	
Image Diagonal	12mm	
Average Transmission	>80%	
Circular FOV	13.68°	
Back Focus Distance	Refer to Drawing	
Back Working Distance	12.5mm(Lf')	
Dimensions	Length47.27, Φ50mm	
Focus Type	Manual Focus	
Focus Range	2m to infinity	
Mount Type	M40*0.75	
Detector	320*240pixels, 30μm	
Weight	-	
Environmental		
Operating Temperature	-20°C to +60°C	
Storage Temperature	-40°C to +80°C	
External Coating	DLC	Diamond like coating
Humidity	100%RH at 26°C and 74%RH at 35°C for 24 hours	

Drawing

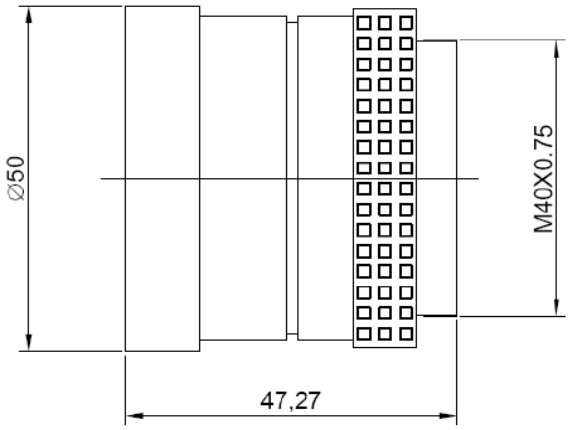

MWIR Lens 3-5µm

Part no.: IRM10020320

Opto-Mechanic Property	Specification	Remarks
Focal Length	100mm	
F#	2.0	
Wavelength	3µm—5µm	
Image Diagonal	12mm	
Average Transmission	>80%	
Circular FOV	6.87°	
Back Focus Distance	45.14mm	
Back Working Distance	40.64mm	
Dimensions	Length62.73mm, Φ60mm	
Focus Type	Manual Focus	
Focus Range	2m to infinity	
Mount Type	M48*0.75	
Detector	320*240pixels, 30µm	
Weight	-	
Environmental		
Operating Temperature	-30°C to +60°C	
Storage Temperature	-40°C to +80°C	
External Coating	DLC	Diamond like coating
Humidity	100%RH at 26°C and 74%RH at 35°C for 24 hours	

Drawing

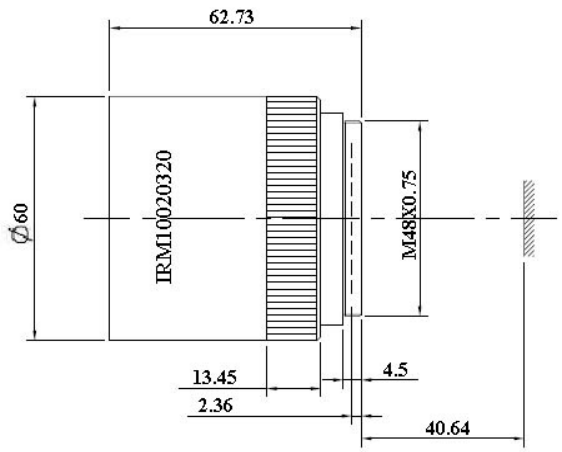

MWIR Lens 3-5µm

NEW

Part no.: IRM7-2.4-640

Opto-Mechanic Property	Specification	Remarks
Focal Length	7mm	
F#	2.4	
Wavelength	3µm—5µm	
Image Diagonal	12.3mm	
Average Transmission	>90%	
Circular FOV	82.5°	
Back Focus Distance	31.97mm	
Back Working Distance	28.76mm	
Dimensions	Length135.51mm, Φ116mm	
Focus Type	Manual Focus	
Focus Range	-	
Mount Type	Bayonet Mount	
Detector	640*512pixels, 15µm	
Weight	-	
Environmental		
Operating Temperature	-30°C to +60°C	
Storage Temperature	-40°C to +80°C	
External Coating	AR	Anti-Reflection coating
Humidity	100%RH at 26°C and 74%RH at 35°C for 24 hours	

Drawing

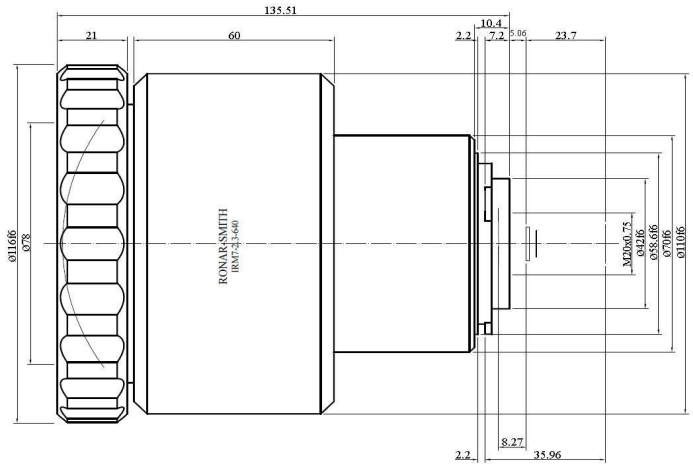

MWIR Lens 3-5µm

NEW

Part no.: IRM13-2.0-640

Opto-Mechanic Property	Specification	Remarks
Focal Length	13mm	
F#	2.0	
Wavelength	3µm—5µm	
Image Diagonal	16.39mm	
Average Transmission	>90%	
Circular FOV	65°	
Back Focus Distance	-	
Back Working Distance	24.23mm	
Dimensions	Length44mm, Φ30mm	
Focus Type	Manual Focus	
Focus Range	-	
Mount Type	M24*1	
Detector	640*512pixels, 20µm	
Weight	-	
Environmental		
Operating Temperature	-30°C to +60°C	
Storage Temperature	-40°C to +80°C	
External Coating	AR	Anti-Reflection coating
Humidity	100%RH at 26°C and 74%RH at 35°C for 24 hours	

Drawing

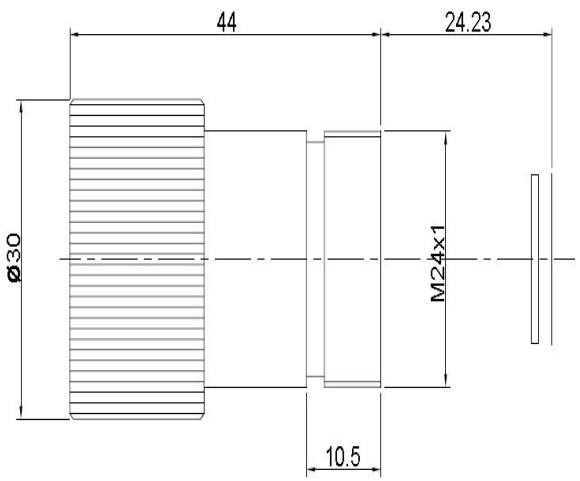

MWIR Lens 3-5μm

NEW

Part no.: IRM70-4.62-320-MOT

Opto-Mechanic Property	Specification	Remarks
Focal Length	70mm	
F#	4.62	
Wavelength	3μm—5μm	
Image Diagonal	12mm	
Average Transmission	>90%	
Circular FOV	9.8°	
Back Focus Distance	-	
Back Working Distance	27.9mm	
Dimensions	Length42~57mm, Φ48mm	
Focus Type	Motorized Focus	
Focus Range	-	
Mount Type	-	
Detector	320*240pixels, 30μm	
Weight	-	
Environmental		
Operating Temperature	-30°C to +60°C	
Storage Temperature	-40°C to +80°C	
External Coating	DLC	Diamond like coating
Humidity	100%RH at 26°C and 74%RH at 35°C for 24 hours	

Drawing

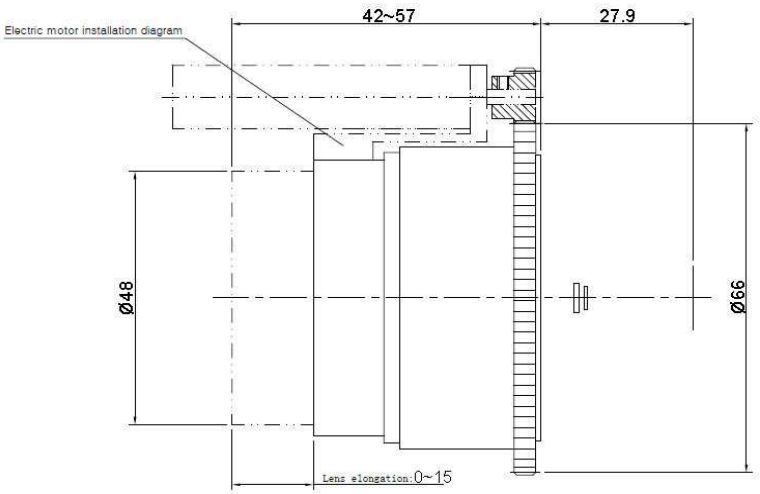

MWIR Lens 3-5µm

NEW

Part no.: IRM100-1.0-640

Opto-Mechanic Property	Specification	Remarks
Focal Length	100mm	
F#	1.0	
Wavelength	3µm—5µm	
Image Diagonal	20mm	
Average Transmission	>90%	
Circular FOV	11.4°	
Back Focus Distance	-	
Back Working Distance	13.4mm	
Dimensions	Length106mm, Φ112mm	
Focus Type	Manual Focus	
Focus Range	2m to infinity	
Mount Type	-	
Detector	640*480pixels, 25µm	
Weight	-	
Environmental		
Operating Temperature	-30°C to +60°C	
Storage Temperature	-40°C to +80°C	
External Coating	AR	Anti-Reflection Coating
Humidity	100%RH at 26°C and 74%RH at 35°C for 24 hours	

Drawing

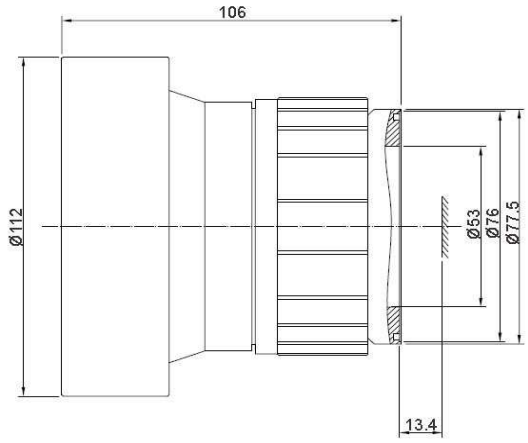

MWIR Lens 3-5µm

NEW

Part no.: IRM40-4.0-640

Opto-Mechanic Property	Specification	Remarks
Focal Length	40mm	
F#	4.0	
Wavelength	3µm—5µm	
Image Diagonal	20mm	
Average Transmission	>90%	
Circular FOV	17.48°	
Back Focus Distance	22.7mm	
Back Working Distance	12.3mm	
Dimensions	Length43.4mm, Φ75.7mm	
Focus Type	Manual Focus	
Focus Range	2m to infinity	
Mount Type	-	
Detector	640*512pixels, 15µm	
Weight	-	
Environmental		
Operating Temperature	-30°C to +60°C	
Storage Temperature	-40°C to +80°C	
External Coating	AR	Anti-Reflection Coating
Humidity	100%RH at 26°C and 74%RH at 35°C for 24 hours	

Drawing

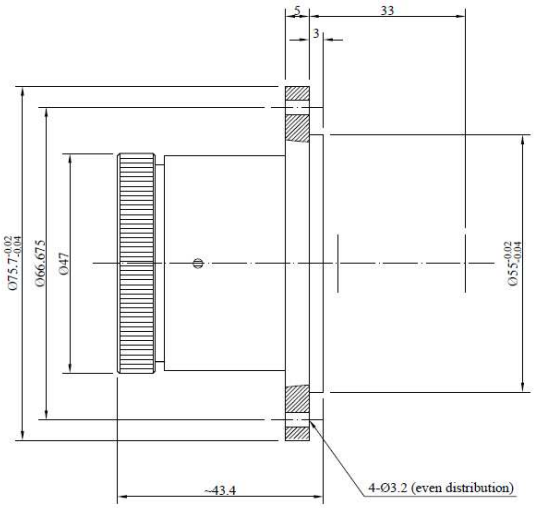

MWIR Lens 3-5µm

NEW

Part no.: IRM100-1.25-640

Opto-Mechanic Property	Specification	Remarks
Focal Length	100mm	
F#	1.25	
Wavelength	3µm—5µm	
Image Diagonal	20mm	
Average Transmission	>90%	
Circular FOV	11.4°	
Back Focus Distance	22.7mm	
Back Working Distance	12.3mm	
Dimensions	Length122.4mm, Φ91mm	
Focus Type	Manual Focus	
Focus Range	2m to infinity	
Mount Type	-	
Detector	640*480pixels, 25µm	
Weight	-	
Environmental		
Operating Temperature	-30°C to +60°C	
Storage Temperature	-40°C to +80°C	
External Coating	AR	Anti-Reflection Coating
Humidity	100%RH at 26°C and 74%RH at 35°C for 24 hours	

Drawing

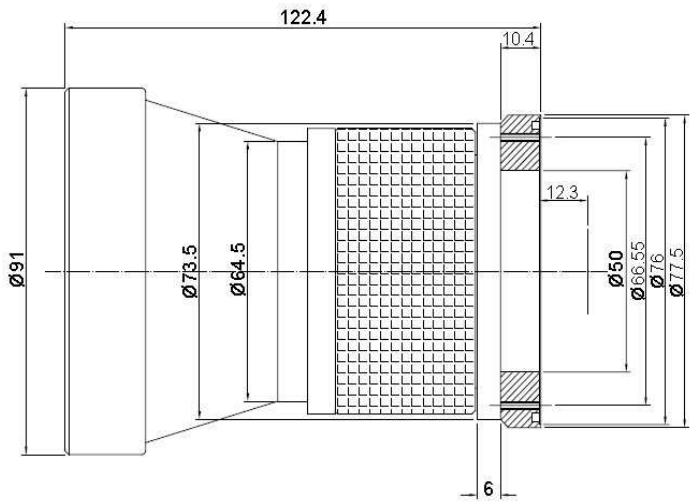

MWIR Lens 3-5um

NEW

Part no.: IRM50-20-1280

Opto-Mechanic Property	Specification	Remarks
Focal Length	50mm	
F#	2.0	
Wavelength	3μm—5μm	
Image Diagonal	25.9mm	
Average Transmission	>85%	
Circular FOV	29°	
Back Focus Distance	-	
Back Working Distance	43mm	
Dimensions	Length50~58mm, Φ66mm	
Focus Type	Manual Focus	
Focus Range	-	
Mount Type	-	
Detector	1280*1160pixels, 15μm	
Weight	-	
Environmental		
Operating Temperature	-30°C to +60°C	
Storage Temperature	-40°C to +80°C	
External Coating	DLC	Diamond like coating
Humidity	100%RH at 26°C and 74%RH at 35°C for 24 hours	

Drawing

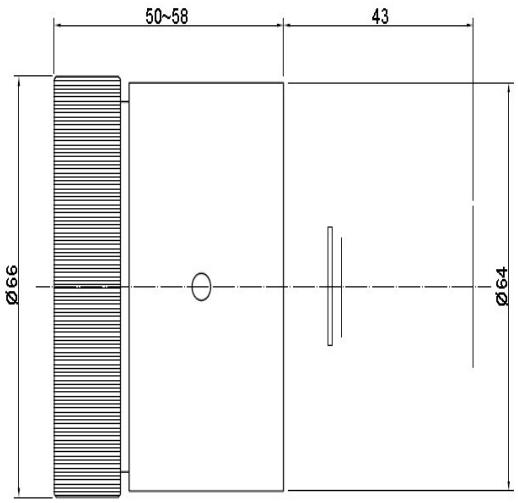

MWIR Lens 3-6μm

NEW

Part no.: IRM32.4-2.5

Opto-Mechanic Property	Specification	Remarks
Focal Length	32.4mm	
F#	1.0	
Wavelength	3μm—6μm	
Image Diagonal	-	
Average Transmission	>85%	
Circular FOV	2.5°	
Back Focus Distance	-	
Back Working Distance	10mm	
Dimensions	Length25mm, Φ41mm	
Focus Type	Fixed Focus	
Focus Range	-	
Mount Type	M41*0.75	
Detector	-	Not for FPA detector
Weight	-	
Environmental		
Operating Temperature	-20°C to +60°C	
Storage Temperature	-40°C to +80°C	
External Coating	DLC	Diamond like coating
Humidity	100%RH at 26°C and 74%RH at 35°C for 24 hours	

Drawing

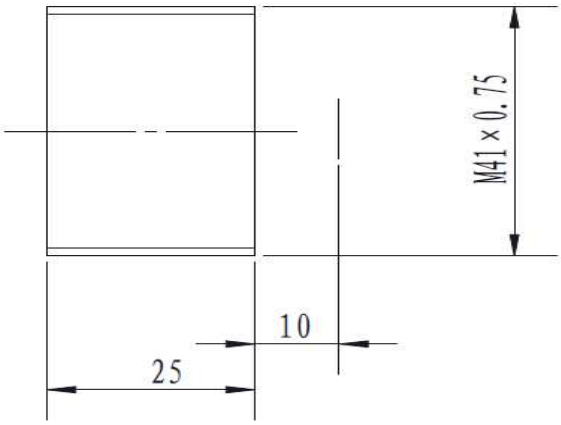

Wide Angle Infrared Camera Lens

Wide-angle lens is a lens whose focal length is substantially shorter than the focal length of a normal lens for wide image size produced by the camera.

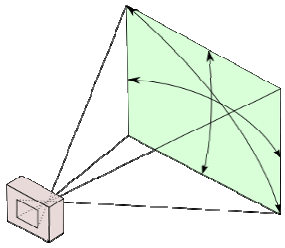

Wavelength short EFL design is catered for long IR range (8μm to 12μm). It is made with angular field of view at 70°. It is well suited for monitoring of large areas under various lighting conditions.

Currently, we have finalized design for Effective Focal Length at 10mm. The design has F number 2. The following (Table-1) is the outline and MTF of the 10mm design.

The outer most lens is coated with Hard Diamond coating and mounted with aluminum mounts. The MTF profile is shown in the following.

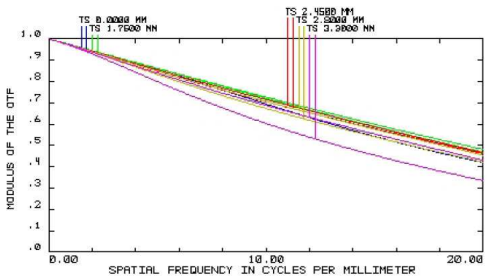

Table-1

MTF Diagram

Applications:

The following picture is to show that lower EFL will capture more objects compared with higher EFL.

As shown in the following picture the EFL 28mm capture more angles compared with the EFL 70mm lens from the same distance.

28mm lens

70mm lens

LWIR Lens 8-12μm

Part no.: IR00920160

Opto-Mechanic Property	Specification	Remarks
Focal Length	9mm	
F#	2.0	
Wavelength	8μm—12μm	
Image Diagonal	7mm	
Average Transmission	>94%	
Circular FOV	42.5°	
Back Focus Distance	6.25mm	
Back Working Distance	2.75mm	
Dimensions	Length16.67mm, Φ23mm	
Focus Type	Manual Focus	
Focus Range	1m to infinity	
Mount Type	M19*0.5	
Detector	160*120pixels, 35μm	
Weight	20g	
Environmental		
Operating Temperature	-20°C to +60°C	
Storage Temperature	-40°C to +80°C	
External Coating	AR	Anti-Reflection coating
Humidity	100%RH at 26°C and 74%RH at 35°C for 24 hours	

Drawing

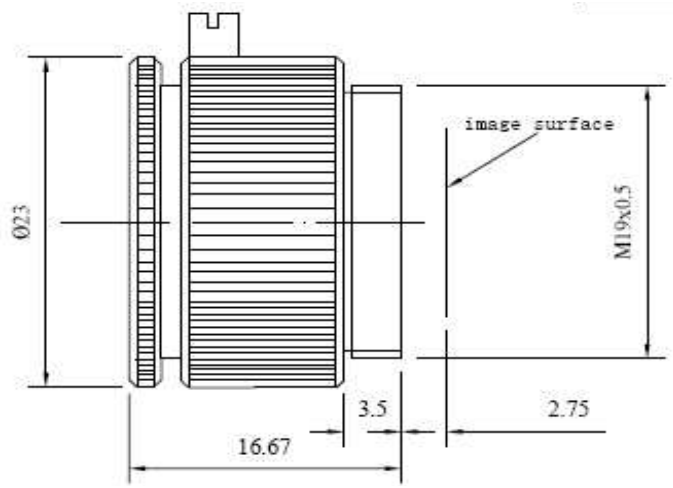

LWIR Lens 8-12µm

Part no.: IR03510160

Opto-Mechanic Property	Specification	Remarks
Focal Length	35mm	
F#	1.0	
Wavelength	8µm—12µm	
Image Diagonal	7mm	
Average Transmission	>85%	
Circular FOV	11.4°	
Back Focus Distance	16.64mm	
Back Working Distance	8.44mm	
Dimensions	Length49.07mm, Φ48mm	
Focus Type	Manual Focus	
Focus Range	1m to infinity	
Mount Type	M34*0.75	
Detector	160*120pixels, 35µm	
Weight	-	
Environmental		
Operating Temperature	-20°C to +60°C	
Storage Temperature	-40°C to +80°C	
External Coating	DLC	Diamond like coating
Humidity	100%RH at 26°C and 74%RH at 35°C for 24 hours	

Drawing

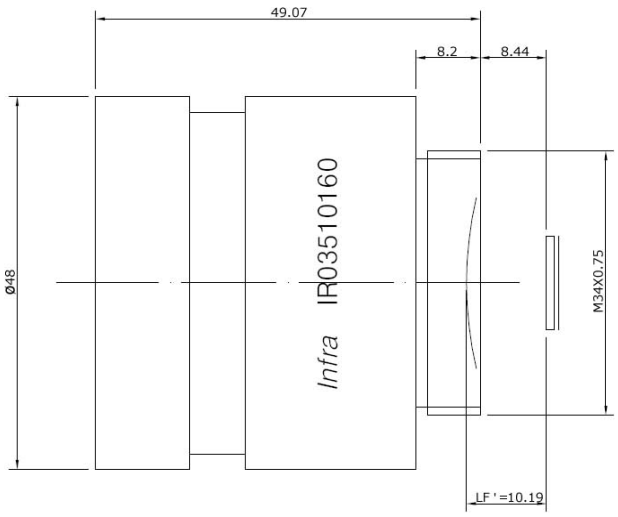

LWIR Lens 8-12µm

NEW

Part no.: IR07510160

Opto-Mechanic Property	Specification	Remarks
Focal Length	75mm	
F#	1.0	
Wavelength	7µm—14µm	
Image Diagonal	5mm	
Average Transmission	>85%	
Circular FOV	60.35°	
Back Focus Distance	14.8mm	
Back Working Distance	10mm	
Dimensions	Length80mm, Φ86mm	
Focus Type	Manual Focus	
Focus Range	1m to infinity	
Mount Type	M34*0.75	
Detector	160*120pixels, 50µm	
Weight	-	
Environmental		
Operating Temperature	-20°C to +60°C	
Storage Temperature	-40°C to +80°C	
External Coating	DLC	Diamond like coating
Humidity	100%RH at 26°C and 74%RH at 35°C for 24 hours	

Drawing

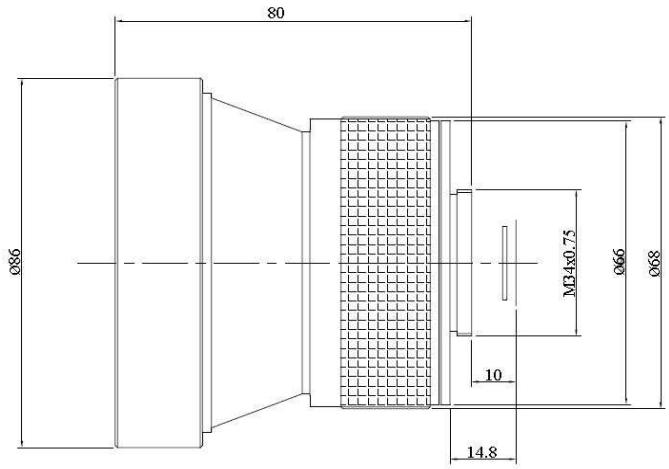

LWIR Lens 8-12µm

NEW

Part no.: IR10-0.8-320

Opto-Mechanic Property	Specification	Remarks
Focal Length	10mm	
F#	0.8	
Wavelength	8µm—12µm	
Image Diagonal	10mm	
Average Transmission	>85%	
Circular FOV	50°	
Back Focus Distance	Refer to drawing	
Back Working Distance	9.4mm	
Dimensions	Length34.5mm, Φ41mm	
Focus Type	Manual Focus	
Focus Range	1m to infinity	
Mount Type	M41*0.75	
Detector	320*240pixels, 23.5µm	
Weight	-	
Environmental		
Operating Temperature	-20°C to +60°C	
Storage Temperature	-40°C to +80°C	
External Coating	DLC	Diamond like coating
Humidity	100%RH at 26°C and 74%RH at 35°C for 24 hours	

Drawing

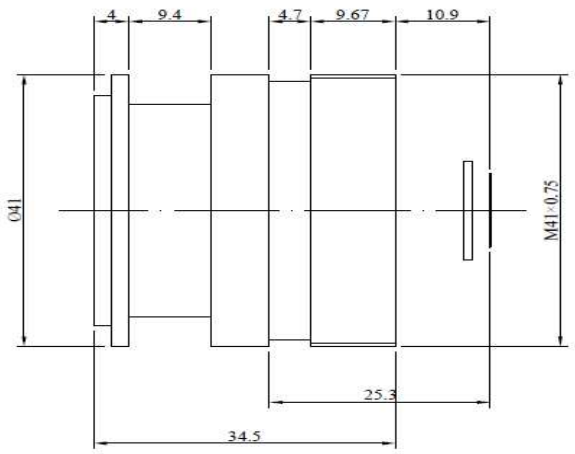

LWIR Lens 8-12µm

NEW

Part no.: IR10.5-0.8-320

Opto-Mechanic Property	Specification	Remarks
Focal Length	10.5mm	
F#	0.8	
Wavelength	8µm—12µm	
Image Diagonal	10mm	
Average Transmission	90%@8-12µm	
Circular FOV	50.9°	
Back Focus Distance	Refer to drawing	
Back Working Distance	7.5mm	
Dimensions	Length37.87mm, Φ41mm	
Focus Type	Manual Focus	
Focus Range	1m to infinity	
Mount Type	M41*0.75	
Detector	320*240pixels, 25µm	
Weight	110g	
Environmental		
Operating Temperature	-20°C to +60°C	
Storage Temperature	-40°C to +80°C	
External Coating	AR	Anti-Reflection coating
Humidity	100%RH at 26°C and 74%RH at 35°C for 24 hours	

Drawing

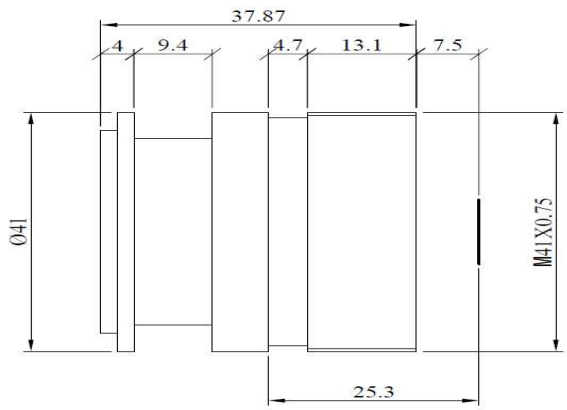

LWIR Lens 8-12μm

NEW

Part no.: IR12-0.85-320

Opto-Mechanic Property	Specification	Remarks
Focal Length	12mm	
F#	0.85	
Wavelength	8μm—12μm	
Image Diagonal	10mm	
Average Transmission	90%@8-12μm	
Circular FOV	45.2°	
Back Focus Distance	Refer to drawing	
Back Working Distance	8mm	
Dimensions	Length36.7mm, Φ41mm	
Focus Type	Manual Focus	
Focus Range	1m to infinity	
Mount Type	M41*0.75	
Detector	320*240pixels, 25μm	
Weight	-	
Environmental		
Operating Temperature	-20°C to +60°C	
Storage Temperature	-40°C to +80°C	
External Coating	AR	Anti-Reflection coating
Humidity	100%RH at 26°C and 74%RH at 35°C for 24 hours	

Drawing

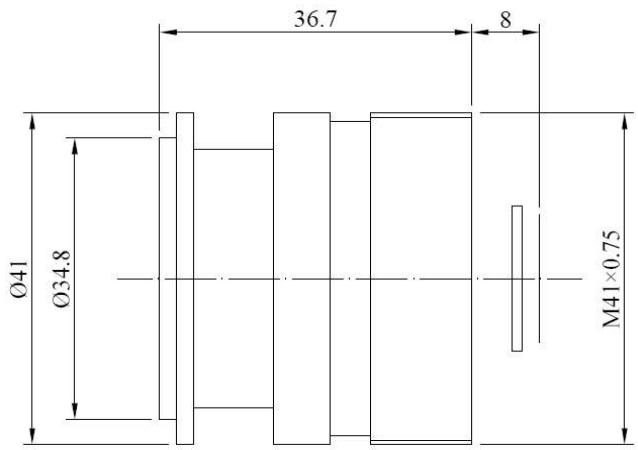

LWIR Lens 8-12μm

Part no.: IR14-0.9-320

Opto-Mechanic Property	Specification	Remarks
Focal Length	14mm	
F#	0.9	
Wavelength	8μm—12μm	
Image Diagonal	14mm	
Average Transmission	90%@8-12μm	
Circular FOV	53.13°	
Back Focus Distance	Refer to drawing	
Back Working Distance	8.86mm	
Dimensions	Length36mm, Φ41mm	
Focus Type	Manual Focus	
Focus Range	1m to infinity	
Mount Type	M41*0.75	
Detector	320*240pixels, 35μm	
Weight	100g	
Environmental		
Operating Temperature	-20°C to +60°C	
Storage Temperature	-40°C to +80°C	
External Coating	AR	Anti-Reflection coating
Humidity	100%RH at 26°C and 74%RH at 35°C for 24 hours	

Drawing

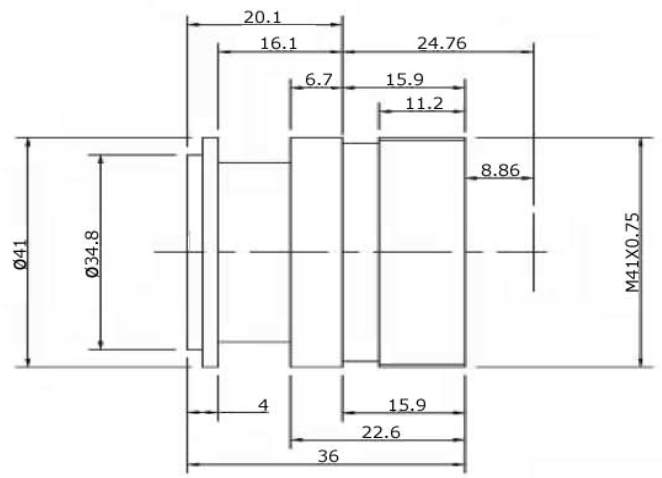

LWIR Lens 8-12µm

Part no.: IR18-0.9-320

Opto-Mechanic Property	Specification	Remarks
Focal Length	18mm	
F#	0.9	
Wavelength	8µm—12µm	
Image Diagonal	18mm	
Average Transmission	>85%@8-12µm	
Circular FOV	53°	
Back Focus Distance	Refer to drawing	
Back Working Distance	10.9mm	
Dimensions	Length33.63mm, Φ41mm	
Focus Type	Manual Focus	
Focus Range	1m to infinity	
Mount Type	M41*0.75	
Detector	320*240pixels, 45µm	
Weight	-	
Environmental		
Operating Temperature	-20°C to +60°C	
Storage Temperature	-40°C to +80°C	
External Coating	DLC	Diamond like coating
Humidity	100%RH at 26°C and 74%RH at 35°C for 24 hours	

Drawing

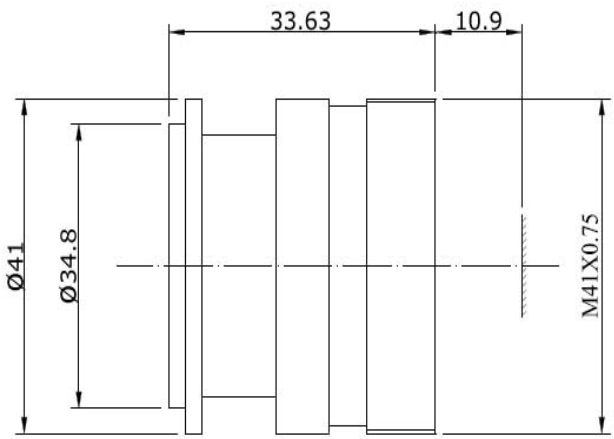

LWIR Lens 8-12μm

Part no.: IR04008320

Opto-Mechanic Property	Specification	Remarks
Focal Length	40mm	
F#	0.8	
Wavelength	8μm—12μm	
Image Diagonal	18mm	
Average Transmission	>85%	
Circular FOV	25.36°	
Back Focal Distance	10.635mm	
Back Working Distance	5.935mm	
Dimensions	Length63.9mm, Φ58mm	
Focus Type	Manual Focus	
Focus Range	2m to infinity	
Mount Type	M50*0.75	
Detector	320*240pixels, 45μm	
Weight	-	
Environmental		
Operating Temperature	-20°C to +60°C	
Storage Temperature	-40°C to +80°C	
External Coating	DLC	Diamond like coating
Humidity	100%RH at 26°C and 74%RH at 35°C for 24 hours	

Drawing

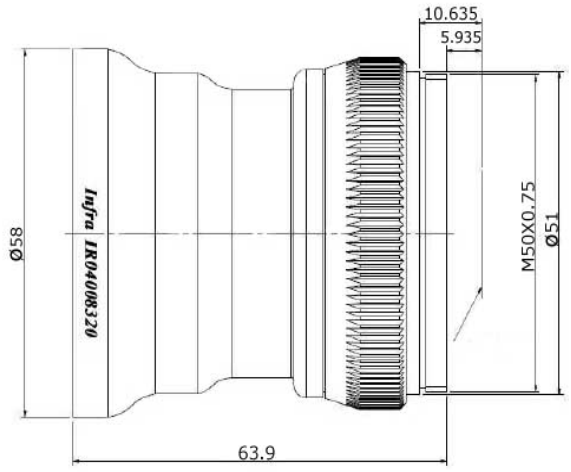

LWIR Lens 8-12µm

Part no.: IR05008320

Opto-Mechanic Property	Specification	Remarks
Focal Length	50mm	
F#	0.8	
Wavelength	8µm—12µm	
Image Diagonal	18mm	
Average Transmission	>90%	
Circular FOV	20.4°	
Back Focus Distance	19.6mm	
Back Working Distance	11.6mm	
Dimensions	Length72.3mm, Φ71mm	
Focus Type	Manual Focus	
Focus Range	1m to infinity	
Mount Type	M59*12teeth/inch	
Detector	320*240pixels, 45µm	
Weight	-	
Environmental		
Operating Temperature	-20°C to +60°C	
Storage Temperature	-40°C to +80°C	
External Coating	AR	Anti-Reflection coating
Humidity	100%RH at 26°C and 74%RH at 35°C for 24 hours	

Drawing

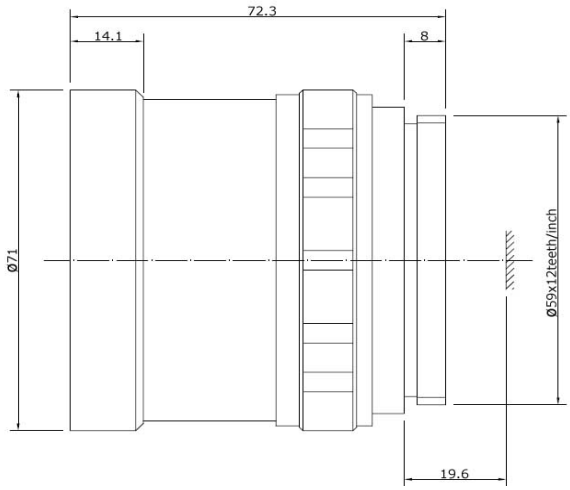

LWIR Lens 8-12μm

Part no.: IR07510320

Opto-Mechanic Property	Specification	Remarks
Focal Length	75mm	
F#	1.0	
Wavelength	8μm—12μm	
Image Diagonal	12mm	
Average Transmission	>85%	
Circular FOV	9.15°	
Back Focus Distance	Refer to Drawing	
Back Working Distance	Refer to Drawing	
Dimensions	Length115.8mm, Φ85mm	
Focus Type	Manual Focus	
Focus Range	2.5m to infinity	
Mount Type	1.3125-32UNS-2A	
Detector	320*240pixels, 30μm	
Weight	-	
Environmental		
Operating Temperature	-20°C to +60°C	
Storage Temperature	-40°C to +80°C	
External Coating	DLC	Diamond like coating
Humidity	100%RH at 26°C and 74%RH at 35°C for 24 hours	

Drawing

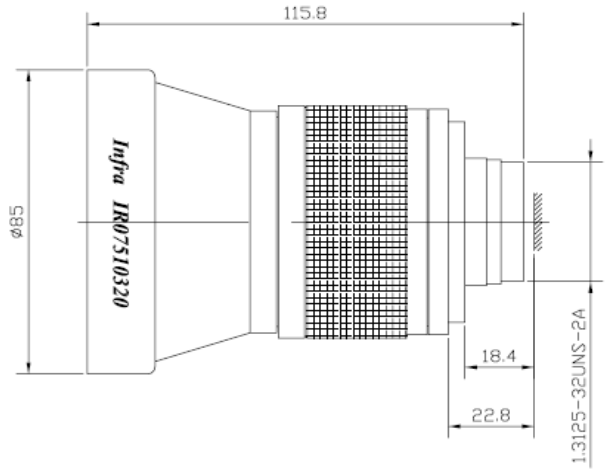

LWIR Lens 8-12µm

Part no.: IR10010320

Opto-mechanic Property	Specification	Remarks
Focal Length	100mm	
F#	1.0	
Wavelength	8µm—12µm	
Image Diagonal	18mm	
Average Transmission	>85%	
Circular FOV	10.3°	
Back Focus Distance	18.4mm	
Back Working Distance	Refer to drawing	
Dimensions	Length143.8mm, Φ112mm	
Focus Type	Manual Focus	
Focus Range	5m to infinity	
Mount Type	1.325-32UNC-2A	
Detector	320*240pixels, 45µm	
Weight	-	
Environmental		
Operating Temperature	-20°C to +60°C	
Storage Temperature	-40°C to +80°C	
External Coating	DLC	Diamond like coating
Humidity	100%RH at 26°C and 74%RH at 35°C for 24 hours	

Drawing

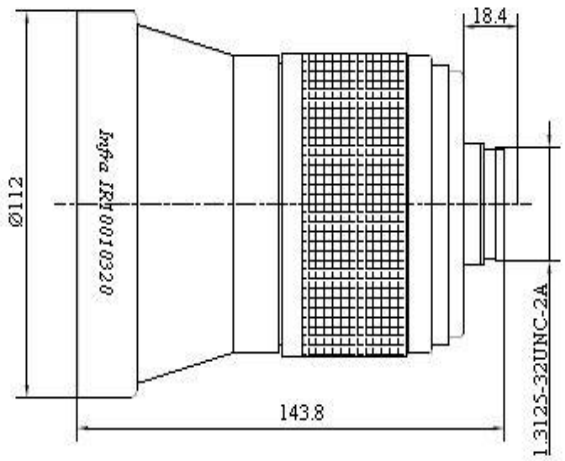

LWIR Lens 8-12μm

Part no.: IR75-1.0-M24

Opto-Mechanic Property	Specification	Remarks
Focal Length	75mm	
F#	1.0	
Wavelength	8μm—14μm	
Image Diagonal	10mm	
Average Transmission	>85%@8-14μm	
Circular FOV	7.63°	
Back Focus Distance	13.4mm	
Back Working Distance	8mm	
Dimensions	Length107.7mm, Φ85mm	
Focus Type	Manual Focus	
Focus Range	-	
Mount Type	M24*1	
Detector	320*240pixels, 25μm	
	640*480pixels, 25μm	
Weight	500g	
Environmental		
Operating Temperature	-20°C to +60°C	
Storage Temperature	-40°C to +80°C	
External Coating	DLC	Diamond like coating
Humidity	100%RH at 26°C and 74%RH at 35°C for 24 hours	

Drawing

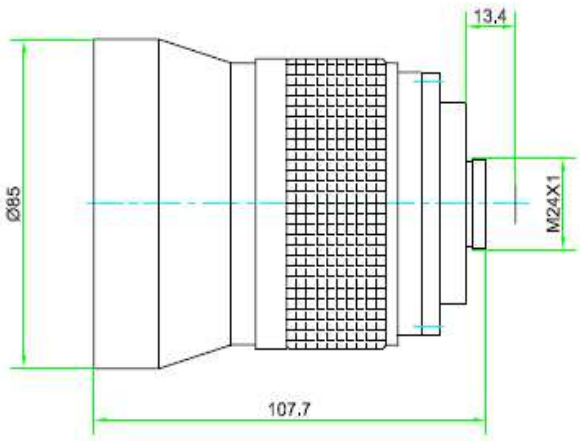

LWIR Lens 8-12µm

Part no.: IR50-1.0-MOT

Opto-Mechanic Property	Specification	Remarks
Focal Length	50mm	
F#	1.0	
Wavelength	8µm—14µm	
Image Diagonal	14mm	
Average Transmission	>85%@8-14um	
Circular FOV	15.94°	
Back Focus Distance	14.5mm	
Back Working Distance	8mm	
Dimensions	Length79.65mm, Φ70mm	
Focus Type	Motorized Focus	
Focus Range	-	
Mount Type	M45*1	
Detector	320*240pixels, 35µm	
Weight	500g	
Motor Voltage	6V DC	
Environmental		
Operating Temperature	-20°C to +60°C	
Storage Temperature	-40°C to +80°C	
External Coating	DLC	Diamond like coating
Humidity	100%RH at 26°C and 74%RH at 35°C for 24 hours	

Drawing

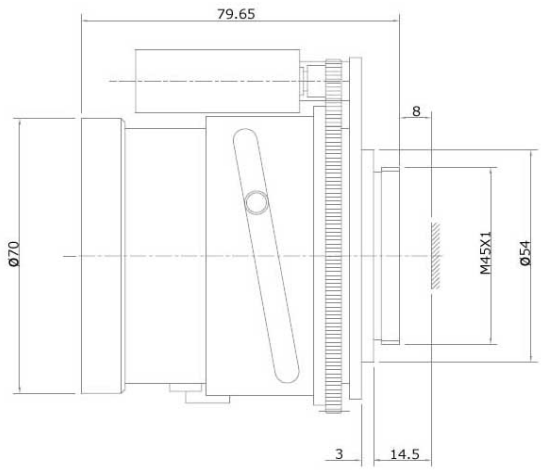

LWIR Lens 8-12µm

NEW

Part no.: IR250-1.1-320-MOT

Opto-Mechanic Property	Specification	Remarks
Focal Length	250mm	
F#	1.1	
Wavelength	7µm—14µm	
Image Diagonal	10.2mm	
Average Transmission	>85%	
Circular FOV	2.3°	
Back Focus Distance		
Back Working Distance	22.8mm	
Dimensions	Length366.5mm, Φ247mm	
Focus Type	Motorized Focus	
Focus Range	-	
Mount Type	-	
Detector	320*256pixels, 25µm	
Weight	-	
Motor Voltage	12V DC	
Environmental		
Operating Temperature	-20°C to +60°C	
Storage Temperature	-40°C to +80°C	
External Coating	DLC	Diamond like coating
Humidity	100%RH at 26°C and 74%RH at 35°C for 24 hours	

Drawing

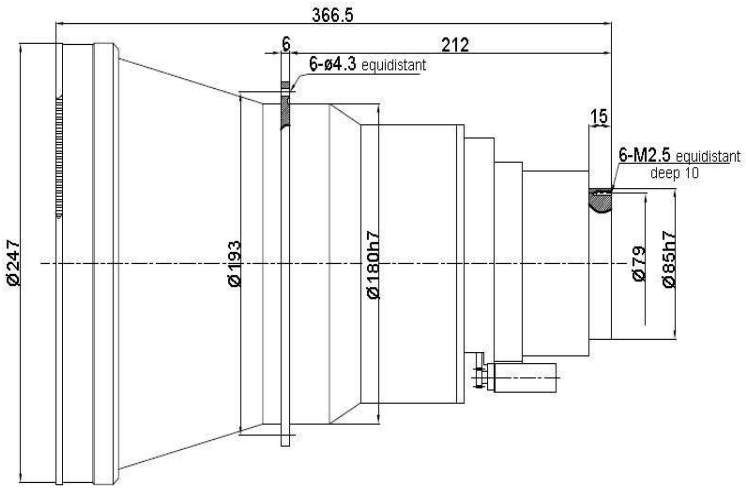

LWIR Lens 8-12µm

NEW

Part no.: IR400-1.8-320-MOT

Opto-Mechanic Property	Specification	Remarks
Focal Length	400mm	
F#	1.8	
Wavelength	7µm—14µm	
Image Diagonal	10.2mm	
Average Transmission	>85%	
Circular FOV	1.46°	
Back Focus Distance	22.8mm	
Back Working Distance	11.1mm	
Dimensions	Length428mm, Φ240mm	
Focus Type	Motorized Focus	
Focus Range	-	
Mount Type	-	
Detector	320*256pixels, 25µm	
Weight	-	
Motor Voltage	12V DC	
Environmental		
Operating Temperature	-20°C to +60°C	
Storage Temperature	-40°C to +80°C	
External Coating	DLC	Diamond like coating
Humidity	100%RH at 26°C and 74%RH at 35°C for 24 hours	

Drawing

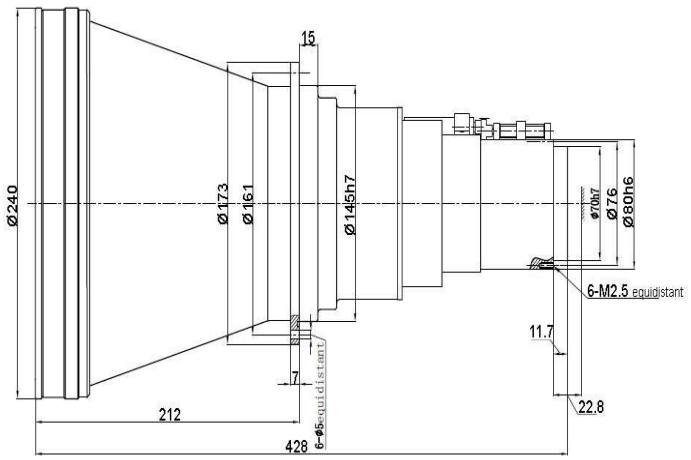

LWIR Lens 8-12μm

Part no.: IR35-1.0-320B-MOT

Opto-Mechanic Property	Specification	Remarks
Focal Length	35mm	
F#	1.0	
Wavelength	8μm—12μm	
Image Diagonal	12mm	
Average Transmission	>85%@8-12um	
Circular FOV	19.46°	
Back Focus Distance	10.1mm	
Back Working Distance	5.1mm	
Dimensions	Length82.3mm, Φ70mm	
Focus Type	Motorized Focus	
Focus Range	-	
Mount Type	M45*1	
Detector	320*240pixels, 30μm	
Weight	-	
Motor Voltage	12V DC	
Environmental		
Operating Temperature	-20°C to +60°C	
Storage Temperature	-40°C to +80°C	
External Coating	DLC	Diamond like coating
Humidity	100%RH at 26°C and 74%RH at 35°C for 24 hours	

Drawing

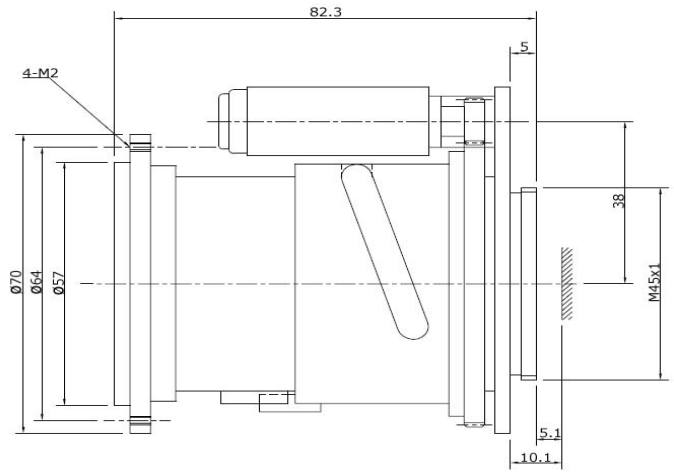

LWIR Lens 8-12µm

Part no.: IR50-1.0-320B-MOT

Opto-Mechanic Property	Specification	Remarks
Focal Length	50mm	
F#	1.0	
Wavelength	8µm—12µm	
Image Diagonal	12mm	
Average Transmission	>85%@8-12µm	
Circular FOV	13.69°	
Back Focus Distance	14.5mm	
Back Working Distance	8mm	
Dimensions	Length79.65mm, Φ70mm	
Focus Type	Motorized Focus	
Focus Range	-	
Mount Type	M45*1	
Detector	320*240pixels, 30µm	
Weight	-	
Motor Voltage	12V DC	
Environmental		
Operating Temperature	-20°C to +60°C	
Storage Temperature	-40°C to +80°C	
External Coating	DLC	Diamond like coating
Humidity	100%RH at 26°C and 74%RH at 35°C for 24 hours	

Drawing

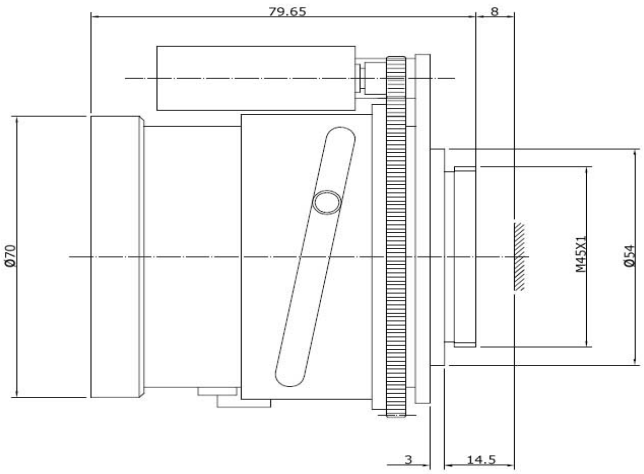

LWIR Lens 8-12μm

Part no.: IR75-1.0-320B-MOT

Opto-Mechanic Property	Specification	Remarks
Focal Length	75mm	
F#	1.0	
Wavelength	8μm—12μm	
Image Diagonal	12mm	
Average Transmission	>85%@8-12μm	
Circular FOV	9.15°	
Back Focus Distance	19.76mm	
Back Working Distance	Refer to drawing	
Dimensions	Length103.88mm, Φ100mm	
Focus Type	Motorized Focus	
Focus Range	-	
Mount Type	58.6-36teeth/inch	
Detector	320*240pixels, 30μm	
Weight	-	
Motor Voltage	12V DC	
Environmental		
Operating Temperature	-20°C to +60°C	
Storage Temperature	-40°C to +80°C	
External Coating	DLC	Diamond like coating
Humidity	100%RH at 26°C and 74%RH at 35°C for 24 hours	

Drawing

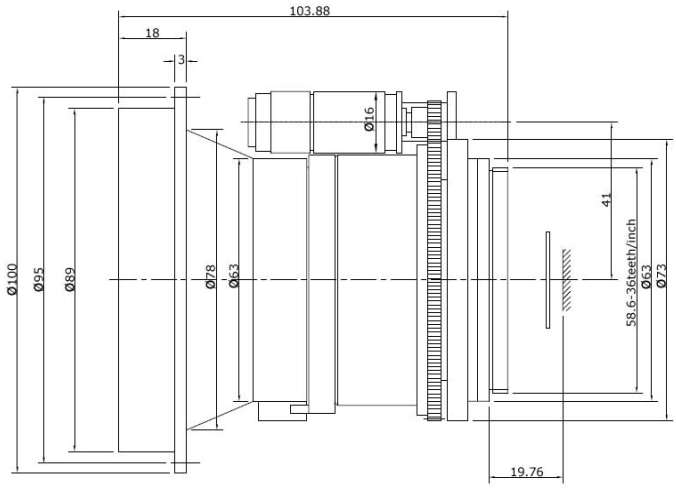

LWIR Lens 8-12µm

NEW

Part no.: IR50-1.0-320C-MOT

Opto-Mechanic Property	Specification	Remarks
Focal Length	50mm	
F#	1.0	
Wavelength	8µm—12µm	
Image Diagonal	15.2mm	
Average Transmission	>85%@8-12µm	
Circular FOV	17.29°	
Back Focus Distance	14.5mm	
Back Working Distance	8mm	
Dimensions	Length70.7mm, Φ65mm	
Focus Type	Motorized Focus	
Focus Range	-	
Mount Type	M45*1	
Detector	320*240pixels, 38µm	
Weight	-	
Motor Voltage	12V DC	
Environmental		
Operating Temperature	-20°C to +60°C	
Storage Temperature	-40°C to +80°C	
External Coating	DLC	Diamond like coating
Humidity	100%RH at 26°C and 74%RH at 35°C for 24 hours	

Drawing

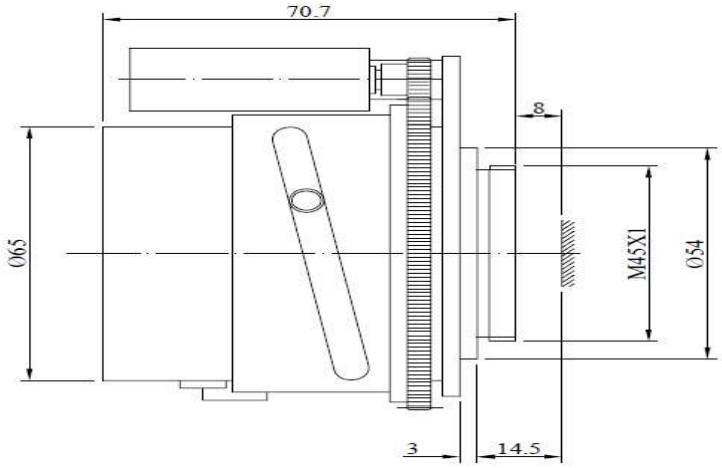

LWIR Lens 8-12µm

NEW

Part no.: IR75-1.0-320C-MOT

Opto-Mechanic Property	Specification	Remarks
Focal Length	75mm	
F#	1.0	
Wavelength	8µm—12µm	
Image Diagonal	15.2mm	
Average Transmission	>85%@8-12µm	
Circular FOV	11.57°	
Back Focus Distance	22.8mm	
Back Working Distance	Refer to drawing	
Dimensions	Length103.9mm, Φ100mm	
Focus Type	Motorized Focus	
Focus Range	-	
Mount Type	M59-12Teeth/Inch	
Detector	320*240pixels, 38µm	
Weight	-	
Motor Voltage	12V DC	
Environmental		
Operating Temperature	-20°C to +60°C	
Storage Temperature	-40°C to +80°C	
External Coating	DLC	Diamond like coating
Humidity	100%RH at 26°C and 74%RH at 35°C for 24 hours	

Drawing

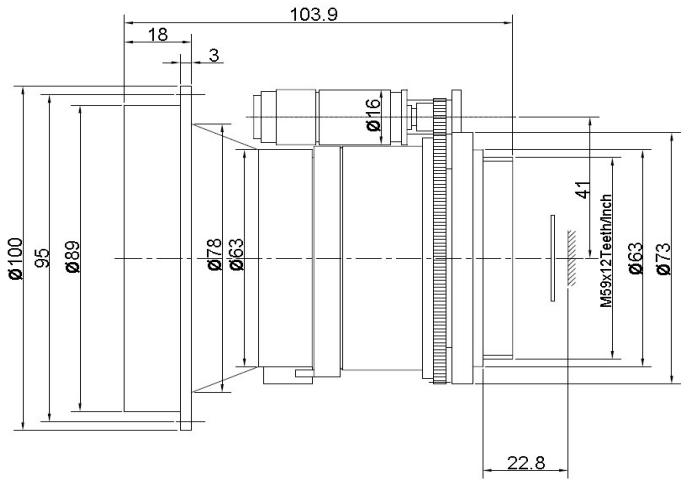

LWIR Lens 8-12μm

NEW

Part no.: IR100-1.0-320C-MOT

Opto-Mechanic Property	Specification	Remarks
Focal Length	100mm	
F#	1.0	
Wavelength	8μm—12μm	
Image Diagonal	15.2mm	
Average Transmission	>85%@8-12μm	
Circular FOV	8.69°	
Back Focus Distance	22.8mm	
Back Working Distance	Refer to drawing	
Dimensions	Length134.3mm, Φ112mm	
Focus Type	Motorized Focus	
Focus Range	-	
Mount Type	M59-12Teeth/Inch	
Detector	320*240pixels, 38μm	
Weight	-	
Motor Voltage	12V DC	
Environmental		
Operating Temperature	-20°C to +60°C	
Storage Temperature	-40°C to +80°C	
External Coating	DLC	Diamond like coating
Humidity	100%RH at 26°C and 74%RH at 35°C for 24 hours	

Drawing

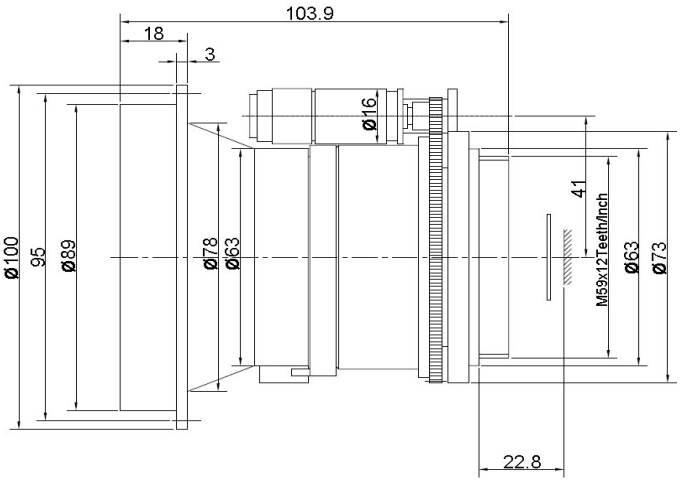

LWIR Lens 8-12μm

NEW

Part no.: IR4-1.0-320N

Opto-Mechanic Property	Specification	Remarks
Focal Length	4mm	
F#	1.0	
Wavelength	8μm—14μm	
Image Diagonal	10mm	
Average Transmission	>85%@8-14μm	
Circular FOV	—°	
Back Focus Distance	Refer to drawing	
Back Working Distance	7.5mm	
Dimensions	Length46.41mm, Φ44mm	
Focus Type	Manual Focus	
Focus Range	1m to infinity	
Mount Type	M24*1	
Detector	320*240pixels, 25μm	
Weight	-	
Environmental		
Operating Temperature	-20°C to +60°C	
Storage Temperature	-40°C to +80°C	
External Coating	DLC	Diamond like coating
Humidity	100%RH at 26°C and 74%RH at 35°C for 24 hours	

Drawing

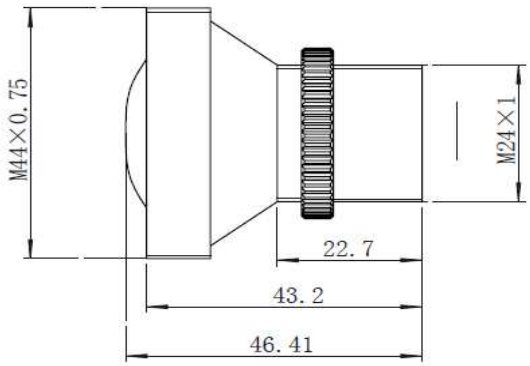

LWIR Lens 8-12μm

Part no.: IR5-1.0-320N

Opto-Mechanic Property	Specification	Remarks
Focal Length	5mm	
F#	1.0	
Wavelength	8μm—14μm	
Image Diagonal	10mm	
Average Transmission	>85%@8-14μm	
Circular FOV	90°	
Back Focus Distance	12.9mm	
Back Working Distance	Refer to drawing	
Dimensions	Length29.5~26.5mm, Φ30mm	
Focus Type	Manual Focus	
Focus Range	1m to infinity	
Mount Type	M24*1	
Detector	320*240pixels, 25μm	
Weight	50g	
Environmental		
Operating Temperature	-20°C to +60°C	
Storage Temperature	-40°C to +80°C	
External Coating	DLC	Diamond like coating
Humidity	100%RH at 26°C and 74%RH at 35°C for 24 hours	

Drawing

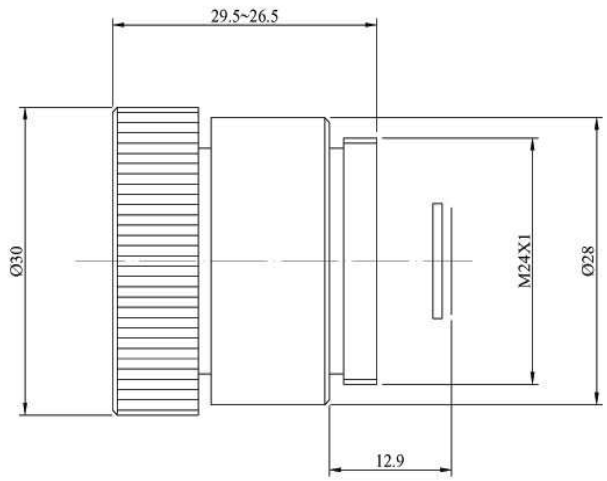

LWIR Lens 8-12μm

NEW

Part no.: IR6-1.0-320N

Opto-Mechanic Property	Specification	Remarks
Focal Length	6mm	
F#	1.0	
Wavelength	8μm—14μm	
Image Diagonal	10mm	
Average Transmission	>85%@8-14μm	
Circular FOV	90°	
Back Focus Distance	Refer to drawing	
Back Working Distance	8.3mm	
Dimensions	Length29.3mm, Φ34mm	
Focus Type	Manual Focus	
Focus Range	1m to infinity	
Mount Type	M24*1	
Detector	320*240pixels, 25μm	
Weight	-	
Environmental		
Operating Temperature	-20°C to +60°C	
Storage Temperature	-40°C to +80°C	
External Coating	DLC	Diamond like coating
Humidity	100%RH at 26°C and 74%RH at 35°C for 24 hours	

Drawing

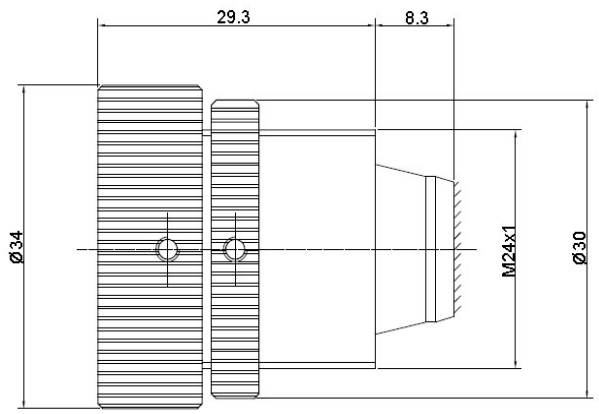

LWIR Lens 8-12μm

NEW

Part no.: IR14-1.0-320N

Opto-Mechanic Property	Specification	Remarks
Focal Length	14mm	
F#	1.0	
Wavelength	8μm—14μm	
Image Diagonal	10mm	
Average Transmission	>85%@8-14μm	
Circular FOV	39.3°	
Back Focus Distance	Refer to drawing	
Back Working Distance	-	
Dimensions	Length mm, Φmm	
Focus Type	Manual Focus	
Focus Range	1m to infinity	
Mount Type	M24*1	
Detector	320*240pixels, 25μm	
Weight	-	
Environmental		
Operating Temperature	-20°C to +60°C	
Storage Temperature	-40°C to +80°C	
External Coating	DLC	Diamond like coating
Humidity	100%RH at 26°C and 74%RH at 35°C for 24 hours	

Drawing

LWIR Lens 8-12μm

Part no.: IR50-1.0-320N

Opto-Mechanic Property	Specification	Remarks
Focal Length	50mm	
F#	1.0	
Wavelength	8μm—14μm	
Image Diagonal	10mm	
Average Transmission	>85%@8-14μm	
Circular FOV	11.42°	
Back Focus Distance	12.9mm	
Back Working Distance	Refer to drawing	
Dimensions	Length81~87.5mm, Φ70mm	
Focus Type	Manual Focus	
Focus Range	-	
Mount Type	M24*1	
Detector	320*240pixels, 25μm	
Weight	-	
Environmental		
Operating Temperature	-20°C to +60°C	
Storage Temperature	-40°C to +80°C	
External Coating	DLC	Diamond like coating
Humidity	100%RH at 26°C and 74%RH at 35°C for 24 hours	

Drawing

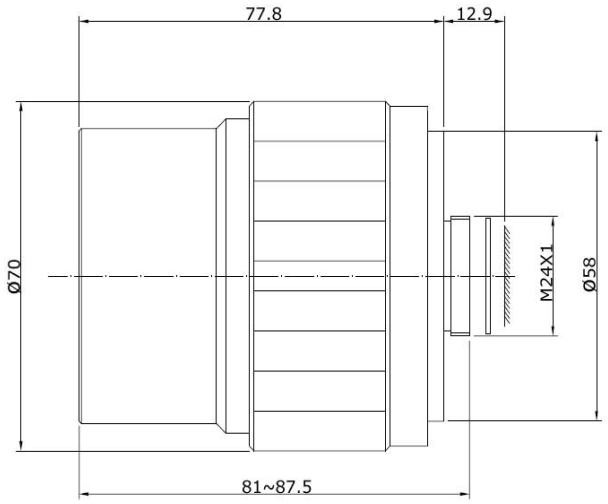

LWIR Lens 8-12µm

Part no.: IR17-1.0-320N-MOT

Opto-Mechanic Property	Specification	Remarks
Focal Length	17mm	
F#	1.0	
Wavelength	8µm—14µm	
Image Diagonal	10mm	
Average Transmission	>85%@8-14µm	
Circular FOV	32.78°	
Back Focus Distance	12.9mm	
Back Working Distance	Refer to drawing	
Dimensions	Max. 78mm x 48mm	
Focus Type	Motorized Focus	
Focus Range	-	
Mount Type	M24*1	
Detector	320*240pixels, 25µm	
Weight	-	
Motor Voltage	6V DC	
Environmental		
Operating Temperature	-20°C to +60°C	
Storage Temperature	-40°C to +80°C	
External Coating	DLC	Diamond like coating
Humidity	100%RH at 26°C and 74%RH at 35°C for 24 hours	

Drawing

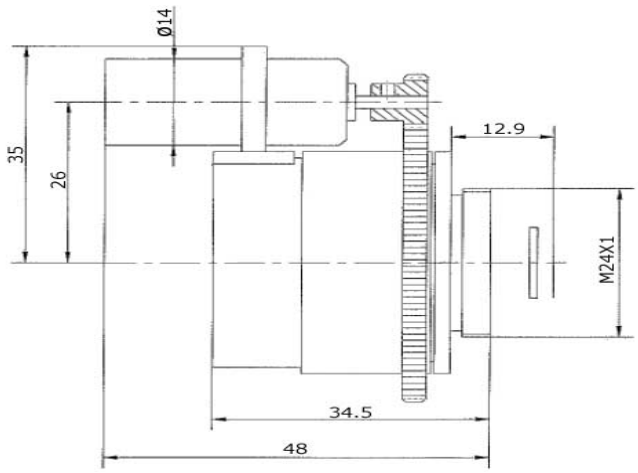

LWIR Lens 8-12μm

Part no.: IR25-1.0-320N-MOT

Opto-Mechanic Property	Specification	Remarks
Focal Length	25mm	
F#	1.0	
Wavelength	8μm—14μm	
Image Diagonal	10mm	
Average Transmission	>85%@8-14um	
Circular FOV	22.62°	
Back Focus Distance	12.9mm	
Back Working Distance	Refer to drawing	
Dimensions	Length50mm, Φ42mm	
Focus Type	Motorized Focus	
Focus Range	-	
Mount Type	M24*1	
Detector	320*240pixels, 25μm	
Weight	-	
Motor Voltage	6V DC	
Environmental		
Operating Temperature	-20°C to +60°C	
Storage Temperature	-40°C to +80°C	
External Coating	DLC	Diamond like coating
Humidity	100%RH at 26°C and 74%RH at 35°C for 24 hours	

Drawing

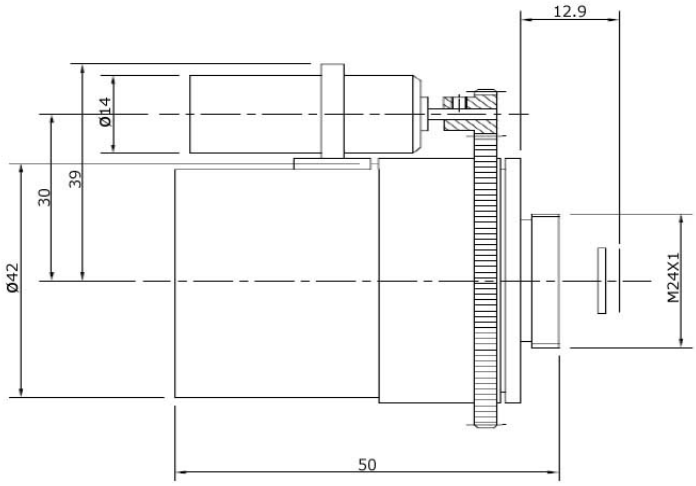

LWIR Lens 8-12µm

Part no.: IR35-1.0-320N-MOT

Opto-Mechanic Property	Specification	Remarks
Focal Length	35mm	
F#	1.0	
Wavelength	8µm—14µm	
Image Diagonal	10mm	
Average Transmission	90%@8-14µm	
Circular FOV	16.26°	
Back Focus Distance	12.9mm	
Back Working Distance	Refer to drawing	
Dimensions	Length63mm, Φ52mm	
Focus Type	Motorized Focus	
Focus Range	-	
Mount Type	M24*1	
Detector	320*240pixels, 25µm	
Weight	200g	
Motor Voltage	6V DC	
Environmental		
Operating Temperature	-20°C to +60°C	
Storage Temperature	-40°C to +80°C	
External Coating	AR	Anti Reflection coating
Humidity	100%RH at 26°C and 74%RH at 35°C for 24 hours	

Drawing

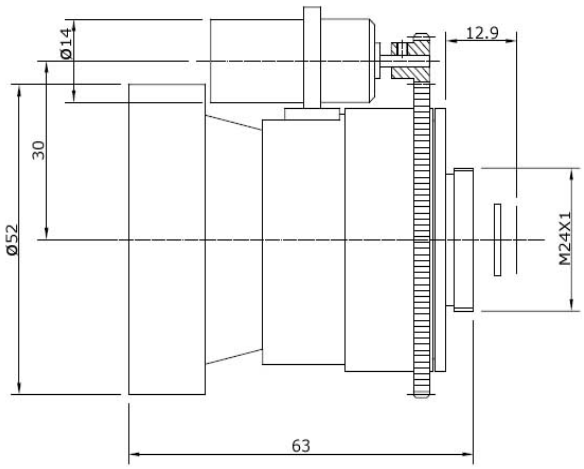

LWIR Lens 8-12μm

Part no.: IR50-1.0-320N-MOT

Opto-Mechanic Property	Specification	Remarks
Focal Length	50mm	
F#	1.0	
Wavelength	8μm—14μm	
Image Diagonal	10mm	
Average Transmission	90%@8-14μm	
Circular FOV	11.42°	
Back Focus Distance	12.9mm	
Back Working Distance	Refer to drawing	
Dimensions	Length81.3~87.3mm, Φ67mm	
Focus Type	Motorized Focus	
Focus Range	-	
Mount Type	M24*1	
Detector	320*240pixels, 25μm	
Weight	-	
Motor Voltage	6V DC	
Environmental		
Operating Temperature	-20°C to +60°C	
Storage Temperature	-40°C to +80°C	
External Coating	AR	Anti-Reflection coating
Humidity	100%RH at 26°C and 74%RH at 35°C for 24 hours	

Drawing

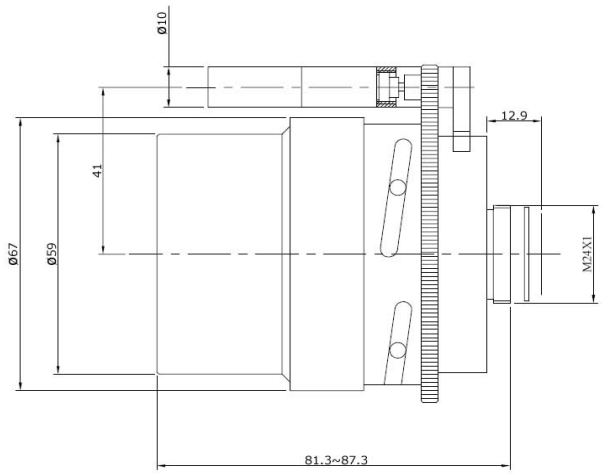

LWIR Lens 8-12µm

Part no.: IR75-1.0-320N-MOT

Opto-Mechanic Property	Specification	Remarks
Focal Length	75mm	
F#	1.0	
Wavelength	8µm—14µm	
Image Diagonal	10mm	
Average Transmission	90%@8-14µm	
Circular FOV	7.63°	
Back Focus Distance	12.9mm	
Back Working Distance	Refer to drawing	
Dimensions	Length111.1mm, Φ100mm	
Focus Type	Motorized Focus	
Focus Range	-	
Mount Type	M24*1	
Detector	320*240pixels, 25µm	
Weight	630g	
Motor Voltage	12V DC	
Environmental		
Operating Temperature	-20°C to +60°C	
Storage Temperature	-40°C to +80°C	
External Coating	AR	Anti-Reflection coating
Humidity	100%RH at 26°C and 74%RH at 35°C for 24 hours	

Drawing

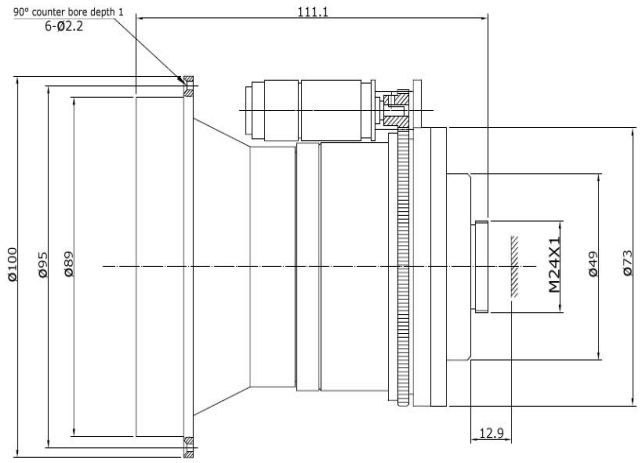

LWIR Lens 8-12µm

Part no.: IR75-1.2-320N-MOT

Opto-Mechanic Property	Specification	Remarks
Focal Length	75mm	
F#	1.2	
Wavelength	8µm—12µm	
Image Diagonal	10mm	
Average Transmission	>85%@8-12µm	
Circular FOV	7.63°	
Back Focus Distance	12.9mm	
Back Working Distance	7.4mm	
Dimensions	Length104.5mm, Φ77mm	
Focus Type	Motorized Focus	
Focus Range	-	
Mount Type	M24*1	
Detector	320*240pixels, 25µm	
Weight	500g	
Motor Voltage	12V DC	
Environmental		
Operating Temperature	-20°C to +60°C	
Storage Temperature	-40°C to +80°C	
External Coating	AR	Anti-Reflection Coating
Humidity	100%RH at 26°C and 74%RH at 35°C for 24 hours	

Drawing

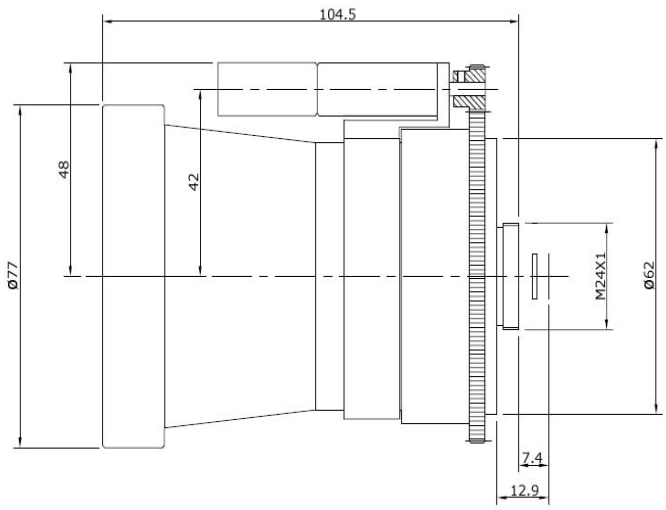

LWIR Lens 8-12µm

Part no.: IR2100-1.0-320N-MOT

Opto-Mechanic Property	Specification	Remarks
Focal Length	100mm	
F#	1.0	
Wavelength	8µm—14µm	
Image Diagonal	10mm	
Average Transmission	89%@8-14µm	
Circular FOV	5.72°	
Back Focus Distance	12.9mm	
Back Working Distance	7.4mm	
Dimensions	Length141.2mm, Φ112mm	
Focus Type	Motorized Focus	
Focus Range	-	
Mount Type	M24*1	
Detector	320*240pixels, 25µm	
Weight	1250g	
Motor Voltage	12V DC	
Environmental		
Operating Temperature	-20°C to +60°C	
Storage Temperature	-40°C to +80°C	
External Coating	DLC	Diamond like coating
Humidity	100%RH at 26°C and 74%RH at 35°C for 24 hours	

Drawing

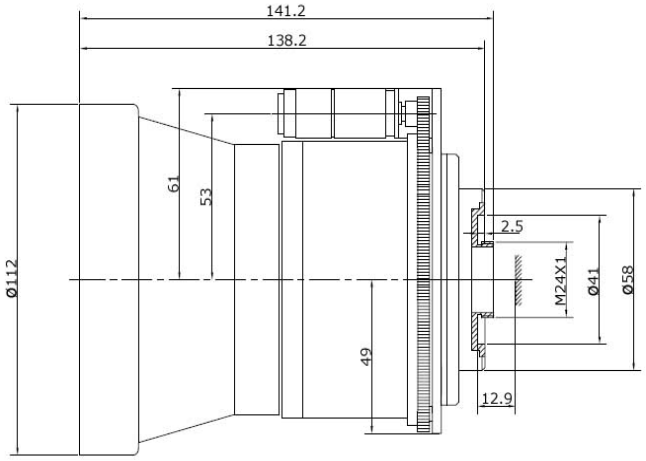

LWIR Lens 8-12μm

NEW

Part no.: IR35-1.0-324

Opto-Mechanic property	Specification	Remarks
Focal Length	35mm	
F#	1.0	
Wavelength	8μm—12μm	
Image Diagonal	10.3mm	
Average Transmission	>85%	
Circular FOV	16.74°	
Back Focus Distance	13.3mm	
Back Working Distance	8.3mm	
Dimensions	Length65.2mm, Φ50mm	
Focus Type	Manual Focus	
Focus Range	1m to infinity	
Mount Type	Thread M45*1	
Detector	324*256pixels, 25μm	
Weight	-	
Environmental		
Operating Temperature	-20°C to +60°C	
Storage Temperature	-40°C to +80°C	
External Coating	DLC	Diamond like coating
Humidity	100%RH at 26°C and 74%RH at 35°C for 24 hours	

Drawing

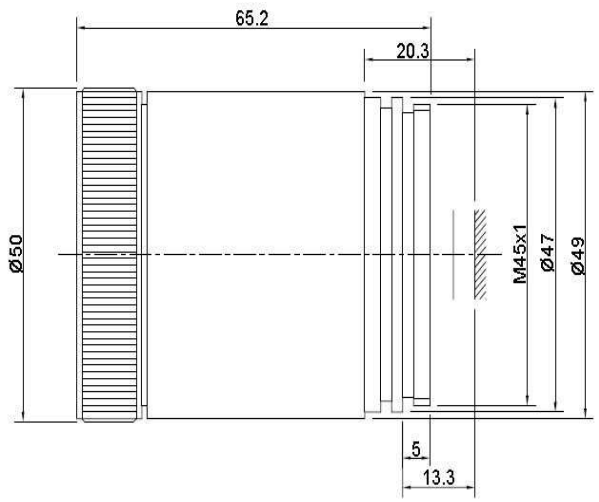

LWIR Lens 8-12μm

NEW

Part no.: IR35-1.3-324

Opto-Mechanic property	Specification	Remarks
Focal Length	35mm	
F#	1.3	
Wavelength	8μm—12μm	
Image Diagonal	10.3mm	
Average Transmission	>85%	
Circular FOV	16.74°	
Back Focus Distance	13.3mm	
Back Working Distance	7.8mm	
Dimensions	Length60~66.5mm, Φ47mm	
Focus Type	Manual Focus	
Focus Range	1m to infinity	
Mount Type	Thread M34*0.75	
Detector	324*256pixels, 25μm	
Weight	-	
Environmental		
Operating Temperature	-20°C to +60°C	
Storage Temperature	-40°C to +80°C	
External Coating	DLC	Diamond like coating
Humidity	100%RH at 26°C and 74%RH at 35°C for 24 hours	

Drawing

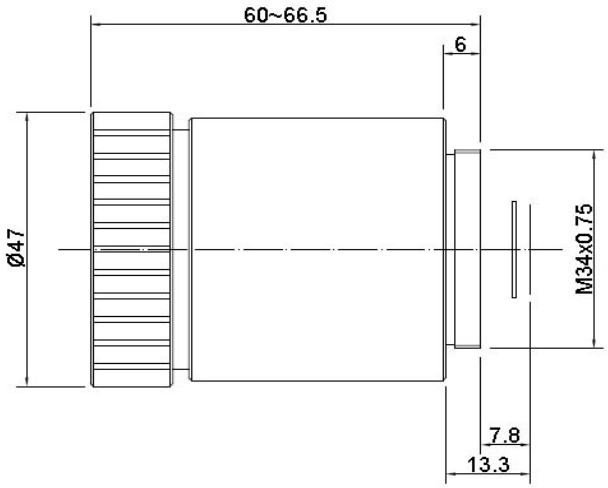

LWIR Lens 8-12μm

NEW

Part no.: IR35-1.0-324-MOT

Opto-Mechanic property	Specification	Remarks
Focal Length	35mm	
F#	1.0	
Wavelength	8μm—12μm	
Image Diagonal	10.3mm	
Average Transmission	>85%	
Circular FOV	16.74°	
Back Focus Distance	12.9mm	
Back Working Distance	7.9mm	
Dimensions	Length64mm, Φ53mm	
Focus Type	Manual Focus	
Focus Range	1m to infinity	
Mount Type	Thread M24*1	
Detector	324*256pixels, 25μm	
Weight	-	
Environmental		
Operating Temperature	-20°C to +60°C	
Storage Temperature	-40°C to +80°C	
External Coating	DLC	Diamond like coating
Humidity	100%RH at 26°C and 74%RH at 35°C for 24 hours	

Drawing

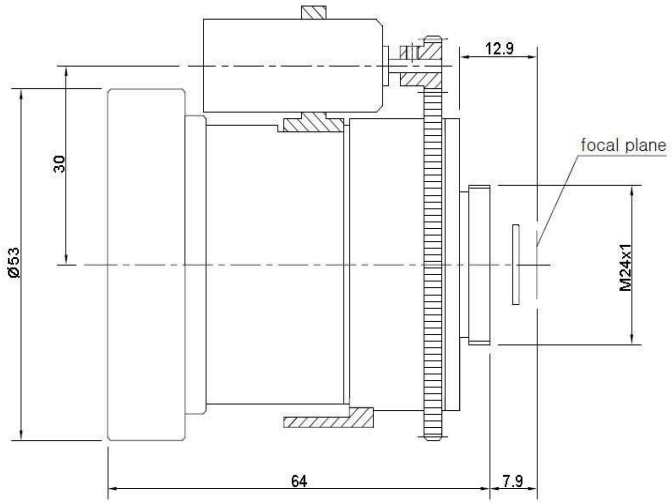

LWIR Lens 8-12μm

NEW

Part no.: IR90-1.1-360

Opto-Mechanic property	Specification	Remarks
Focal Length	90mm	
F#	1.1	
Wavelength	8μm—14μm	
Image Diagonal	10.8mm	
Average Transmission	>85%	
Circular FOV	6.9°	
Back Focus Distance	22.8mm	
Back Working Distance	14.3mm	
Dimensions	Length110mm, Φ98mm	
Focus Type	Manual Focus	
Focus Range	1m to infinity	
Mount Type	Thread M24*1	
Detector	360*240pixels, 25μm	
Weight	-	
Environmental		
Operating Temperature	-20°C to +60°C	
Storage Temperature	-40°C to +80°C	
External Coating	DLC	Diamond like coating
Humidity	100%RH at 26°C and 74%RH at 35°C for 24 hours	

Drawing

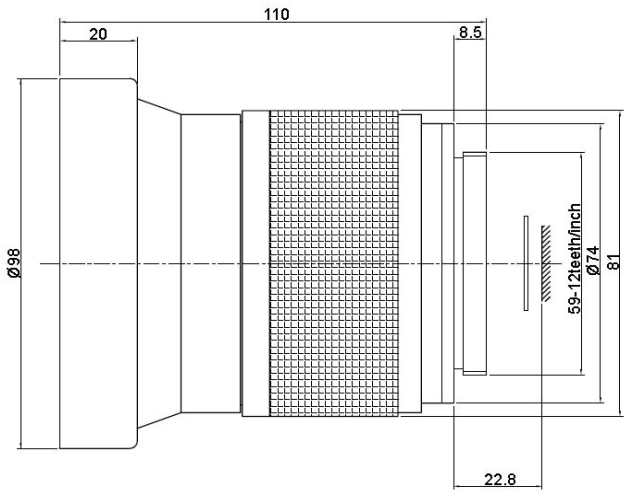

LWIR Lens 8-12μm

Part no.: IR02510384G

Opto-Mechanic property	Specification	Remarks
Focal Length	25mm	
F#	1.0	
Wavelength	8μm—12μm	
Image Diagonal	16.8mm	
Average Transmission	>85%	
Circular FOV	37.14°	
Back Focus Distance	13.292mm	
Back Working Distance	7.587mm	
Dimensions	Length45.39mm, Φ40mm	
Focus Type	Manual Focus	
Focus Range	1m to infinity	
Mount Type	Thread M34*0.75	
Detector	384*288pixels, 35μm	
Weight	-	
Environmental		
Operating Temperature	-20°C to +60°C	
Storage Temperature	-40°C to +80°C	
External Coating	DLC	Diamond like coating
Humidity	100%RH at 26°C and 74%RH at 35°C for 24 hours	

Drawing

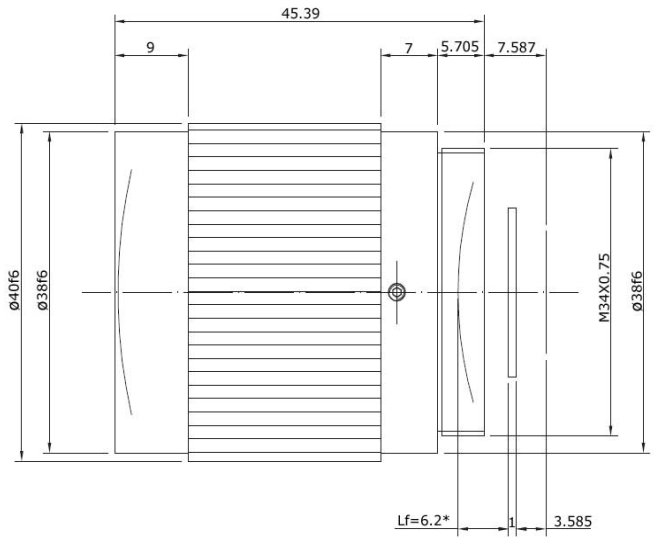

LWIR Lens 8-12µm

Part no.: IR02510384-MOT

Opto-Mechanic Property	Specification	Remarks
Focal Length	25mm	
F#	1.0	
Wavelength	8µm—12µm	
Image Diagonal	16.8mm	
Average Transmission	>85%	
Circular FOV	37.14°	
Back Focal Distance	18.4mm	
Back Working Distance	Refer to drawing	
Dimensions	Length54mm, Φ51mm	
Focus Type	Motorized Focus	
Focus Range	1m to infinity	
Mount Type	1.3125-32UNS-2A	
Detector	384*288pixels, 35µm	
Weight	-	
Environmental		
Operating Temperature	-20°C to +60°C	
Storage Temperature	-40°C to +80°C	
External Coating	DLC	Diamond like coating
Humidity	100%RH at 26°C and 74%RH at 35°C for 24 hours	

Drawing

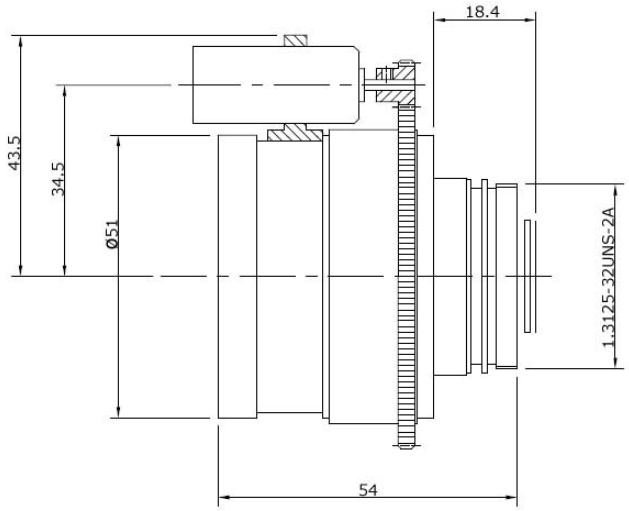

LWIR Lens 8-12μm

Part no.: IR03510384

Opto-Mechanic Property	Specification	Remarks
Focal Length	35mm	
F#	1.0	
Wavelength	8μm—12μm	
Image Diagonal	16.8mm	
Average Transmission	>85%	
Circular FOV	27°	
Back Focal Distance	13.34mm(Lf')	
Back Working Distance	8.69mm	
Dimensions	Length54mm, Φ48mm	
Focus Type	Manual Focus	
Focus Range	1m to infinity	
Mount Type	M48*0.75	
Detector	384*288pixels, 35μm	
Weight	200g	
Environmental		
Operating Temperature	-20°C to +60°C	
Storage Temperature	-40°C to +80°C	
External Coating	DLC	Diamond like coating
Humidity	100%RH at 26°C and 74%RH at 35°C for 24 hours	

Drawing

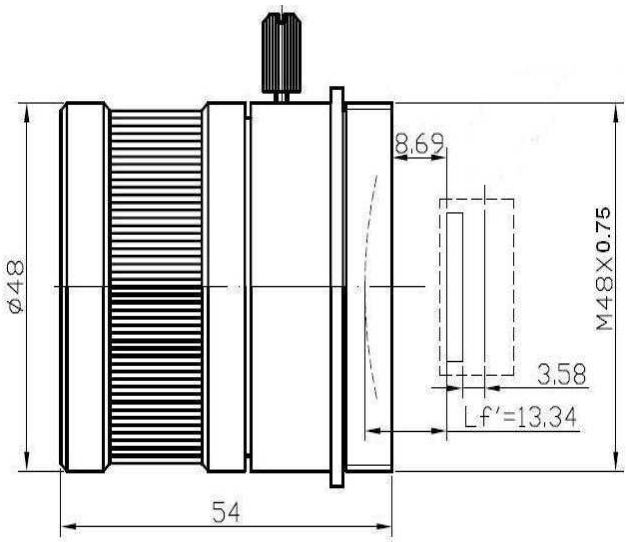

LWIR Lens 8-12µm

Part no.: IR14-0.9-384

Opto-Mechanic Property	Specification	Remarks
Focal Length	14mm	
F#	0.9	
Wavelength	8µm—14µm	
Image Diagonal	12mm	
Average Transmission	85%@8-14µm	
Circular FOV	46.4°	
Back Focus Distance	-	
Back Working Distance	-	
Dimensions	Length36mm, Φ41mm	
Focus Type	Manual Focus	
Focus Range	-	
Mount Type	M41*0.75	
Detector	384*288pixels, 25µm	
Weight	90g	
Environmental		
Operating Temperature	-20°C to +60°C	
Storage Temperature	-40°C to +80°C	
External Coating	DLC	Diamond like coating
Humidity	100%RH at 26°C and 74%RH at 35°C for 24 hours	

Drawing

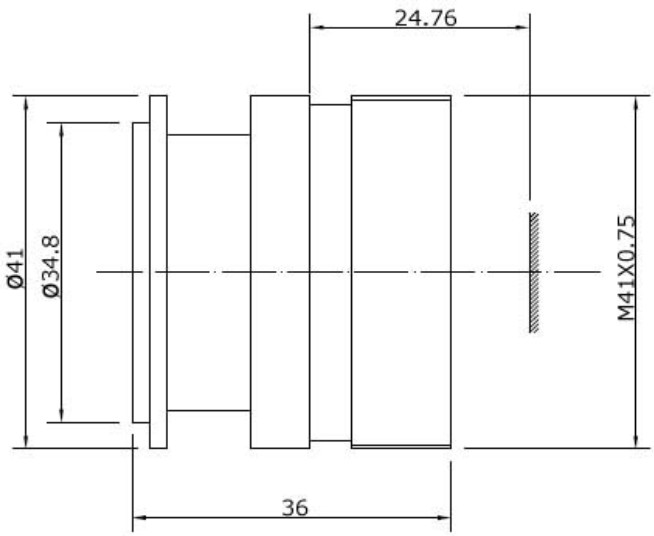

LWIR Lens 8-12μm

Part no.: IR17-1.0-384

Opto-Mechanic Property	Specification	Remarks
Focal Length	17mm	
F#	1.0	
Wavelength	8μm—14μm	
Image Diagonal	12mm	
Average Transmission	90%@8-14μm	
Circular FOV	38.9°	
Back Focus Distance	-	
Back Working Distance	9.5mm	
Dimensions	Length35.5~38mm, Φ40mm	
Focus Type	Manual Focus	
Focus Range	-	
Mount Type	M34*0.75	
Detector	384*288pixels, 25μm	
Weight	80g	
Environmental		
Operating Temperature	-20°C to +60°C	
Storage Temperature	-40°C to +80°C	
External Coating	AR	Anti-Reflection coating
Humidity	100%RH at 26°C and 74%RH at 35°C for 24 hours	

Drawing

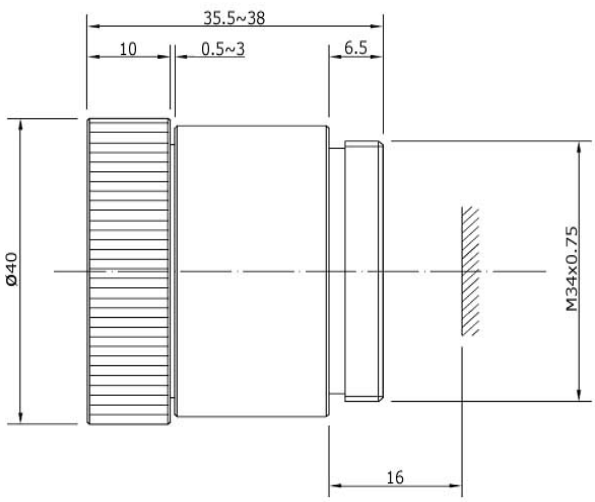

LWIR Lens 8-12μm

NEW

Part no.: IR25-1.0-384

Opto-Mechanic Property	Specification	Remarks
Focal Length	25mm	
F#	1.0	
Wavelength	8μm—14μm	
Image Diagonal	12mm	
Average Transmission	90%@8-14μm	
Circular FOV	26.99°	
Back Focus Distance	13.3mm	
Back Working Distance	5.8mm	
Dimensions	Length34.5~30.5mm, Φ38mm	
Focus Type	Manual Focus	
Focus Range	-	
Mount Type	M34*0.75	
Detector	384*288pixels, 25μm	
Weight	-	
Environmental		
Operating Temperature	-20°C to +60°C	
Storage Temperature	-40°C to +80°C	
External Coating	AR	Anti-Reflection coating
Humidity	100%RH at 26°C and 74%RH at 35°C for 24 hours	

Drawing

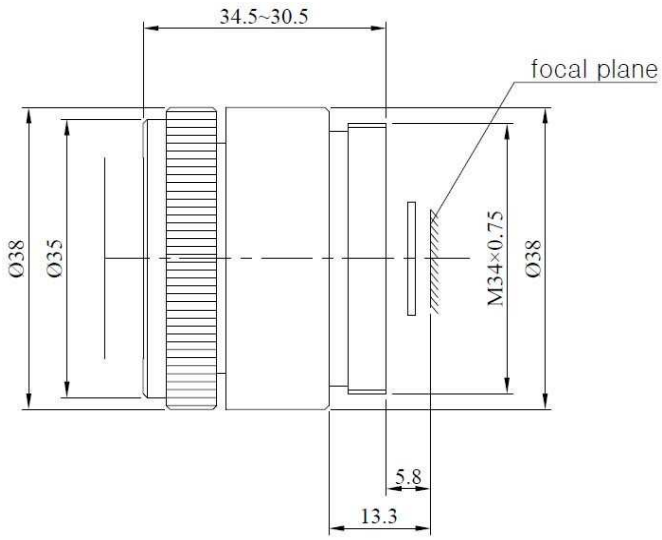

LWIR Lens 8-12μm

Part no.: IR35-1.0-384

Opto-Mechanic Property	Specification	Remarks
Focal Length	35mm	
F#	1.0	
Wavelength	8μm—14μm	
Image Diagonal	12mm	
Average Transmission	90%@8-14μm	
Circular FOV	19.45°	
Back Focus Distance	-	
Back Working Distance	8.3mm	
Dimensions	Length65.2mm, Φ50mm	
Focus Type	Manual Focus	
Focus Range	-	
Mount Type	M45*1	
Detector	384*288pixels, 25μm	
Weight	210g	
Environmental		
Operating Temperature	-20°C to +60°C	
Storage Temperature	-40°C to +80°C	
External Coating	AR	Anti-Reflection coating
Humidity	100%RH at 26°C and 74%RH at 35°C for 24 hours	

Drawing

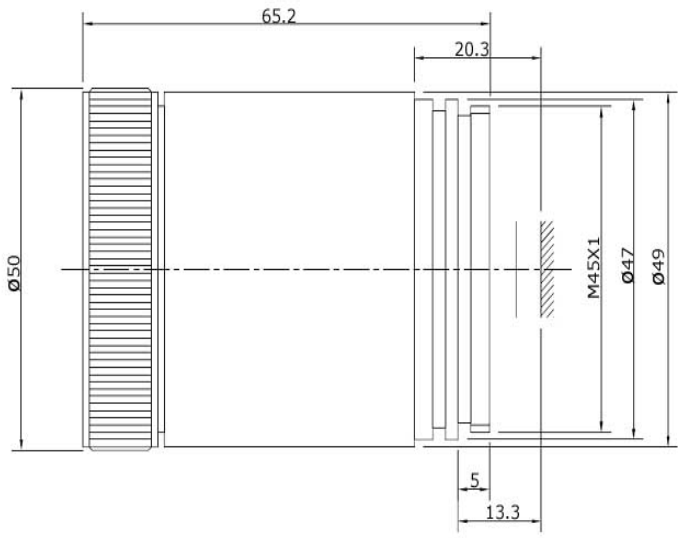

LWIR Lens 8-12μm

NEW

Part no.: IR50-1.0-384

Opto-Mechanic Property	Specification	Remarks
Focal Length	50mm	
F#	1.0	
Wavelength	8μm—14μm	
Image Diagonal	12mm	
Average Transmission	90%@8-14μm	
Circular FOV	13.69°	
Back Focus Distance	18.9mm	
Back Working Distance	8.4mm	
Dimensions	Length79.4~63mm, Φ52mm	
Focus Type	Manual Focus	
Focus Range	-	
Mount Type	M45*1	
Detector	384*288pixels, 25μm	
Weight	-	
Environmental		
Operating Temperature	-20°C to +60°C	
Storage Temperature	-40°C to +80°C	
External Coating	AR	Anti-Reflection coating
Humidity	100%RH at 26°C and 74%RH at 35°C for 24 hours	

Drawing

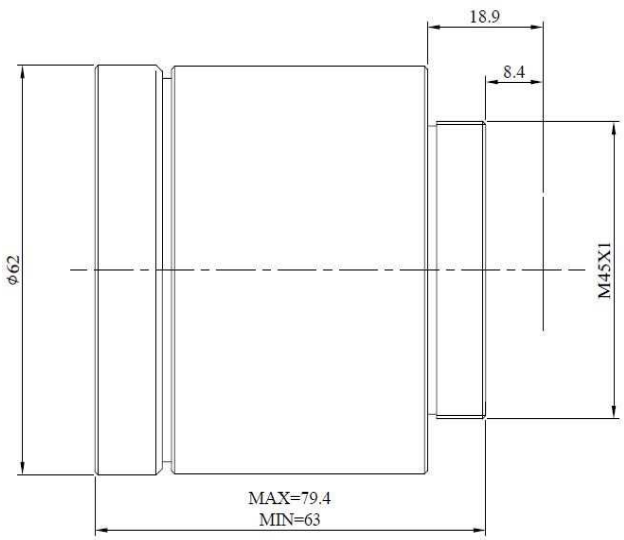

LWIR Lens 8-12μm

Part no.: IR75-1.0-384

Opto-Mechanic Property	Specification	Remarks
Focal Length	75mm	
F#	1.0	
Wavelength	8μm—14μm	
Image Diagonal	12mm	
Average Transmission	90%@8-14μm	
Circular FOV	9.15°	
Back Focus Distance	22.8mm	
Back Working Distance	-	
Dimensions	Length65.2mm, Φ50mm	
Focus Type	Manual Focus	
Focus Range	-	
Mount Type	M59*12teeth/inch	
Detector	384*288pixels, 25μm	
Weight	210g	
Environmental		
Operating Temperature	-20°C to +60°C	
Storage Temperature	-40°C to +80°C	
External Coating	AR	Anti-Reflection coating
Humidity	100%RH at 26°C and 74%RH at 35°C for 24 hours	

Drawing

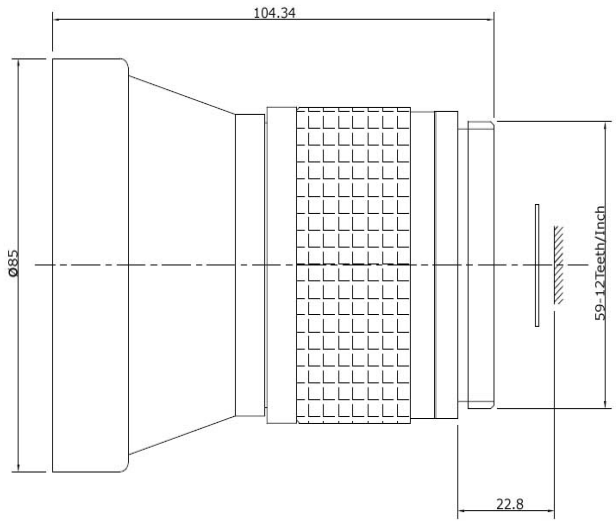

LWIR Lens 8-12μm

Part no.: IR75-1.4-384

Opto-Mechanic Property	Specification	Remarks
Focal Length	75mm	
F#	1.4	
Wavelength	8μm—14μm	
Image Diagonal	16.8mm	384*288pixels, 35μm
	20mm	640*480pixels, 25μm
Average Transmission	>85%@8-14μm	
Circular FOV	12.78°	
	15.19°	
Back Focus Distance	23.6mm	
Back Working Distance	15.1mm	
Dimensions	Length94.75mm, Φ66mm	
Focus Type	Manual Focus	
Focus Range	-	
Mount Type	M59*12teeth/inch	
Detector	384*288pixels, 35μm	
	640*480pixels, 25μm	
Weight	-	
Environmental		
Operating Temperature	-20°C to +60°C	
Storage Temperature	-40°C to +80°C	
External Coating	DLC	Diamond like coating
Humidity	100%RH at 26°C and 74%RH at 35°C for 24 hours	

Drawing

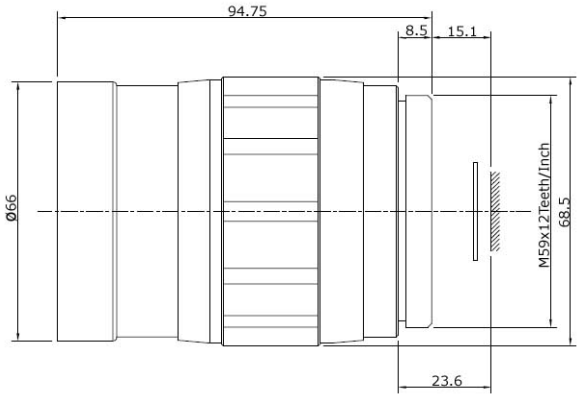

LWIR Lens 8-12μm

NEW

Part no.: IR40-1.0-384-MOT

Opto-Mechanic Property	Specification	Remarks
Focal Length	40mm	
F#	1.0	
Wavelength	8μm—14μm	
Image Diagonal	12mm	
Average Transmission	>85%@8-14μm	
Circular FOV	17.06°	
Back Focus Distance	Refer to drawing	
Back Working Distance	10.1mm	
Dimensions	Length70mm, Φ71mm	
Focus Type	Motorized Focus	
Focus Range	-	
Mount Type	-	
Detector	384*288pixels, 25μm	
Weight	-	
Motor Voltage	12V DC	
Environmental		
Operating Temperature	-20°C to +60°C	
Storage Temperature	-40°C to +80°C	
External Coating	DLC	Diamond like coating
Humidity	100%RH at 26°C and 74%RH at 35°C for 24 hours	

Drawing

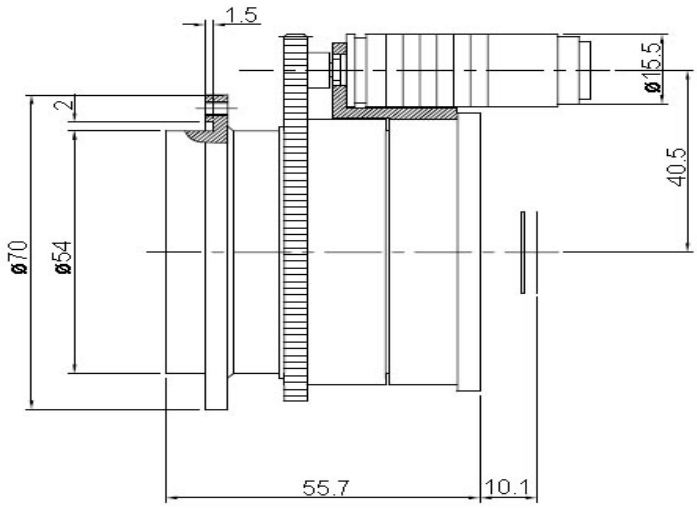

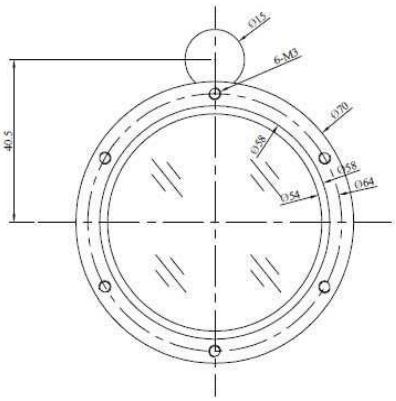

LWIR Lens 8-12µm

Part no.: IR250-0.8-MOT

Opto-Mechanic Property	Specification	Remarks
Focal Length	50mm	
F#	0.8	
Wavelength	8µm—14µm	
Image Diagonal	16.8mm	
Average Transmission	>85%@8-14µm	
Circular FOV	19.07°	
Back Focus Distance	22.8mm	
Back Working Distance	14.3mm	
Dimensions	Length70mm, Φ71mm	
Focus Type	Motorized Focus	
Focus Range	-	
Mount Type	M59*12teeth/inch	
Detector	384*288pixels, 35µm	
Weight	400g	
Motor Voltage	6V DC	
Environmental		
Operating Temperature	-20°C to +60°C	
Storage Temperature	-40°C to +80°C	
External Coating	DLC	Diamond like coating
Humidity	100%RH at 26°C and 74%RH at 35°C for 24 hours	

Drawing

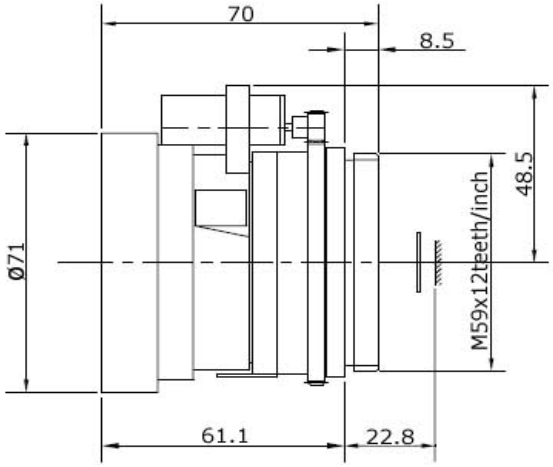

LWIR Lens 8-12μm

NEW

Part no.: IR37.5-2.0-640

Opto-Mechanic Property	Specification	Remarks
Focal Length	37.5mm	
F#	2.0	
Wavelength	8μm—14μm	
Image Diagonal	13.6mm	
Average Transmission	>90%@8-14μm	
Circular FOV	16.52°	
Back Focus Distance	14mm	
Back Working Distance	9mm	
Dimensions	Length66mm, Φ35mm	
Focus Type	Manual Focus	
Focus Range	-	
Mount Type	M20*0.75	
Detector	640*480pixels, 17μm	
Weight		
Environmental		
Operating Temperature	-20°C to +60°C	
Storage Temperature	-40°C to +80°C	
External Coating	AR	Anti-Reflection coating
Humidity	100%RH at 26°C and 74%RH at 35°C for 24 hours	

Drawing

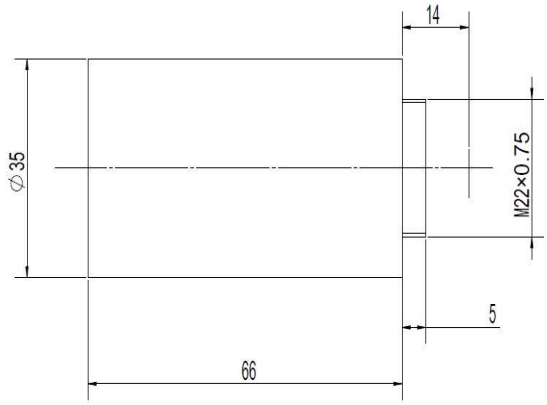

LWIR Lens 8-12µm

NEW

Part no.: IR50-1.0-640

Opto-Mechanic Property	Specification	Remarks
Focal Length	50mm	
F#	1.0	
Wavelength	8µm—14µm	
Image Diagonal	20mm	
Average Transmission	>90%	
Circular FOV	22.62°	
Back Focus Distance	12.9mm	
Back Working Distance	-	
Dimensions	Length77.8mm, Φ70mm	
Focus Type	Manual Focus	
Focus Range	-	
Mount Type	M45*1	
Detector	640*480pixels, 25µm	
Weight		
Environmental		
Operating Temperature	-20°C to +60°C	
Storage Temperature	-40°C to +80°C	
External Coating	DLC	Diamond like coating
Humidity	100%RH at 26°C and 74%RH at 35°C for 24 hours	

Drawing

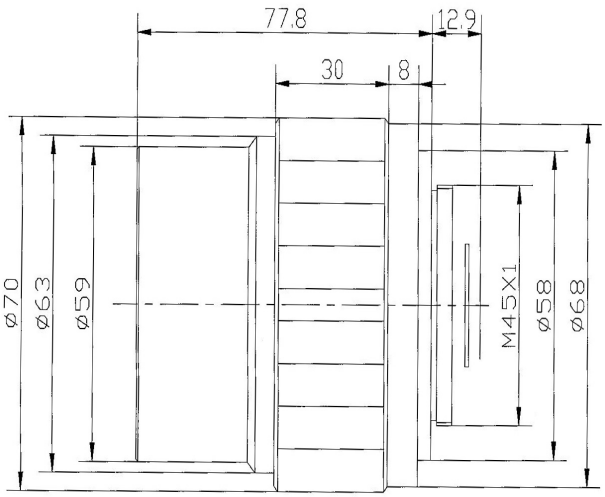

LWIR Lens 8-12μm

NEW

Part no.: IR50-1.0-640D

Opto-Mechanic Property	Specification	Remarks
Focal Length	50mm	
F#	1.0	
Wavelength	8μm—14μm	
Image Diagonal	13.6mm	
Average Transmission	>90%	
Circular FOV	15.5°	
Back Focus Distance	14mm	
Back Working Distance	9mm	
Dimensions	Length76.7mm, Φ70mm	
Focus Type	Manual Focus	
Focus Range	-	
Mount Type	M34*0.75	
Detector	640*480pixels, 17μm	
Weight		
Environmental		
Operating Temperature	-20°C to +60°C	
Storage Temperature	-40°C to +80°C	
External Coating	DLC	Diamond like coating
Humidity	100%RH at 26°C and 74%RH at 35°C for 24 hours	

Drawing

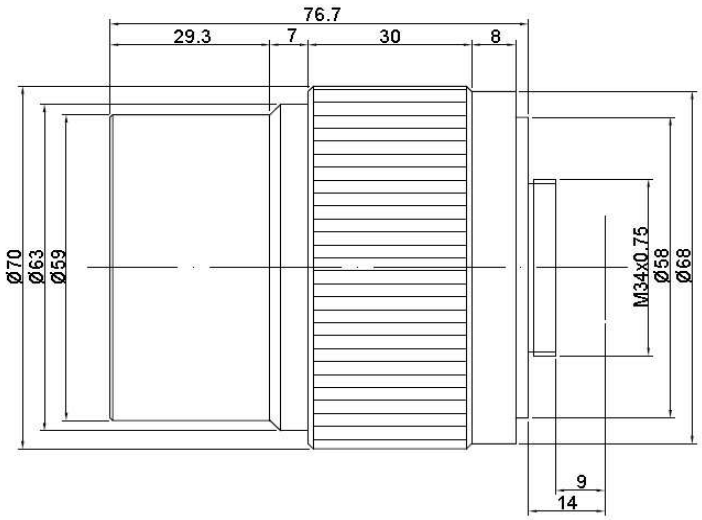

LWIR Lens 8-12μm

NEW

Part no.: IR50-1.0-640D-1

Opto-Mechanic Property	Specification	Remarks
Focal Length	50mm	
F#	1.0	
Wavelength	8μm—14μm	
Image Diagonal	13.6mm	
Average Transmission	>85%	
Circular FOV	15.5°	
Back Focus Distance	-	
Back Working Distance	7mm	
Dimensions	Length82~88m, Φ70mm	
Focus Type	Manual Focus	
Focus Range	-	
Mount Type	-	
Detector	640*480pixels, 17μm	
Weight	540g	
Environmental		
Operating Temperature	-20°C to +60°C	
Storage Temperature	-40°C to +80°C	
External Coating	DLC	Diamond like coating
Humidity	100%RH at 26°C and 74%RH at 35°C for 24 hours	

Drawing

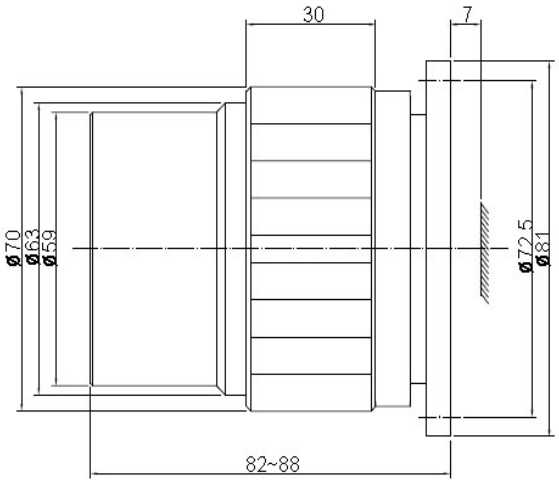

LWIR Lens 8-12μm

NEW

Part no.: IR75-1.4-640

Opto-Mechanic Property	Specification	Remarks
Focal Length	75mm	
F#	1.4	
Wavelength	8μm—14μm	
Image Diagonal	20mm	
Average Transmission	>90%@8-14μm	
Circular FOV	15.19°	
Back Focus Distance	23.6mm	
Back Working Distance	15.1mm	
Dimensions	Length94.75mm, Φ66mm	
Focus Type	Manual Focus	
Focus Range	-	
Mount Type	M59*12Teeth/inch	
Detector	640*480pixels, 25μm	
Weight		
Environmental		
Operating Temperature	-20°C to +60°C	
Storage Temperature	-40°C to +80°C	
External Coating	AR	Anti-Reflection coating
Humidity	100%RH at 26°C and 74%RH at 35°C for 24 hours	

Drawing

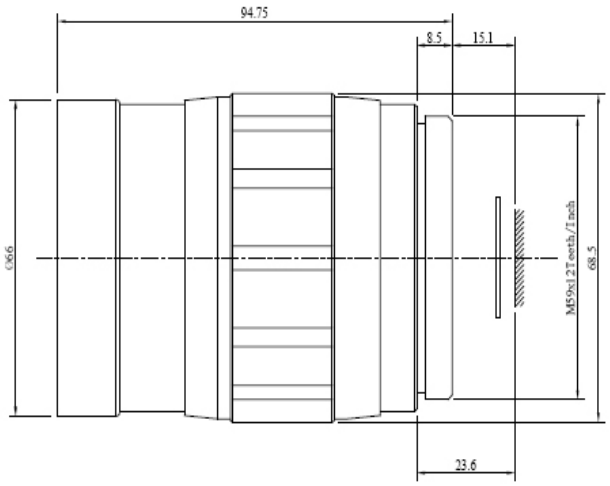

LWIR Lens 8-12μm

NEW

Part no.: IR75.3-2.5-640

Opto-Mechanic Property	Specification	Remarks
Focal Length	75.3mm	
F#	2.5	
Wavelength	8μm—14μm	
Image Diagonal	13.6mm	
Average Transmission	>90%@8-14μm	
Circular FOV	8.26°	
Back Focus Distance	14mm	
Back Working Distance	9mm	
Dimensions	Length40mm, Φ30mm	
Focus Type	Manual Focus	
Focus Range	-	
Mount Type	M20*0.75	
Detector	640*480pixels, 17μm	
Weight		
Environmental		
Operating Temperature	-20°C to +60°C	
Storage Temperature	-40°C to +80°C	
External Coating	AR	Anti-Reflection coating
Humidity	100%RH at 26°C and 74%RH at 35°C for 24 hours	

Drawing

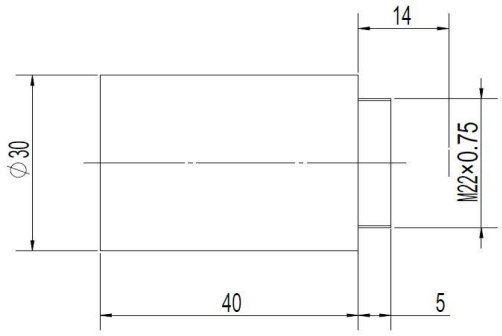

LWIR Lens 8-12μm

NEW

Part no.: IR150-1.0-640D-MOT

Opto-Mechanic Property	Specification	Remarks
Focal Length	150mm	
F#	1.0	
Wavelength	8μm—14μm	
Image Diagonal	13.6mm	
Average Transmission	>90%	
Circular FOV	5.19°	
Back Focus Distance	32.1mm	
Back Working Distance	23.58mm	
Dimensions	Length184mm, Φ170mm	
Focus Type	Motorized Focus	
Focus Range	-	
Mount Type	M65*1	
Detector	640*480pixels, 17μm	
Weight		
Environmental		
Operating Temperature	-20°C to +60°C	
Storage Temperature	-40°C to +80°C	
External Coating	AR	Anti-Reflection coating
Humidity	100%RH at 26°C and 74%RH at 35°C for 24 hours	

Drawing

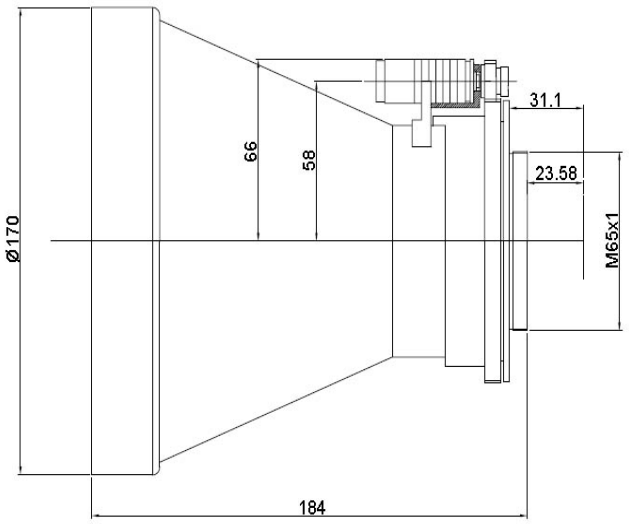

LWIR Lens 8-12µm

NEW

Part no.: IR07514640

Opto-Mechanic Property	Specification	Remarks
Focal Length	75mm	
F#	1.4	
Wavelength	7µm—14µm	
Image Diagonal	20mm	
Average Transmission	>90%	
Circular FOV	15°	
Back Focus Distance	45mm	
Back Working Distance	36mm	
Dimensions	Length78.5mm, Φ68mm	
Focus Type	Manual Focus	
Focus Range	-	
Mount Type	M59-12Teeth/inch	
Detector	640*480pixels, 25µm	
Weight	300g	
Environmental		
Operating Temperature	-30°C to +60°C	
Storage Temperature	-40°C to +80°C	
External Coating	AR	Anti-Reflection coating
Humidity	100%RH at 26°C and 74%RH at 35°C for 24 hours	

Drawing

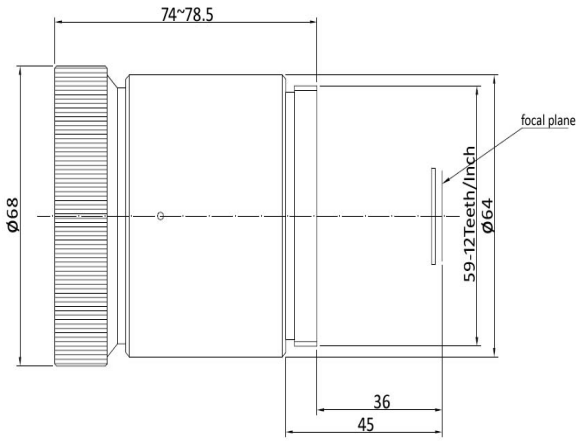

LWIR Lens 8-12μm

Part no.: IR10020640

Opto-Mechanic Property	Specification	Remarks
Focal Length	100mm	
F#	2.0	
Wavelength	8μm—12μm	
Image Diagonal	19.67mm	
Average Transmission	>80%	
Circular FOV	11.2°	
Back Focus Distance	12.9mm	
Back Working Distance	7.9mm	
Dimensions	Length117.12mm, Φ62mm	
Focus Type	Manual Focus	
Focus Range	3m to infinity	
Mount Type	M34*0.75	
Detector	640*512pixels, 24μm	
Weight	-	
Environmental		
Operating Temperature	-30°C to +60°C	
Storage Temperature	-40°C to +80°C	
External Coating	DLC	Diamond like coating
Humidity	100%RH at 26°C and 74%RH at 35°C for 24 hours	

Drawing

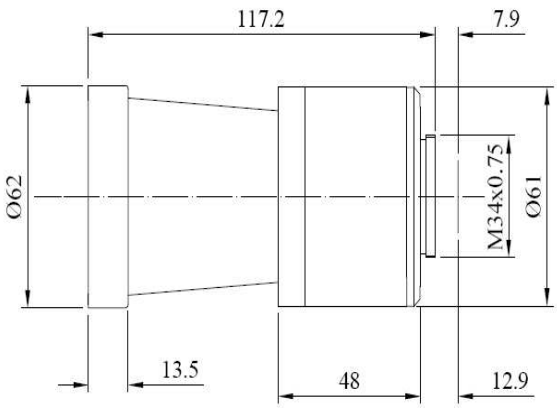

LWIR Lens 8-12μm

NEW

Part no.: IR10020640-B

Opto-Mechanic Property	Specification	Remarks
Focal Length	100mm	
F#	2.0	
Wavelength	8μm—12μm	
Image Diagonal	20mm	
Average Transmission	>85%	
Circular FOV	11.42°	
Back Focus Distance	42.47mm	
Back Working Distance	36.3mm	
Dimensions	Length78mm, Φ100mm	
Focus Type	Manual Focus	
Focus Range	2m to infinity	
Mount Type	M59*12Teeth/inch	
Detector	640*480pixels, 25μm	
Weight	-	
Environmental		
Operating Temperature	-30°C to +60°C	
Storage Temperature	-40°C to +80°C	
External Coating	DLC	Diamond like coating
Humidity	100%RH at 26°C and 74%RH at 35°C for 24 hours	

Drawing

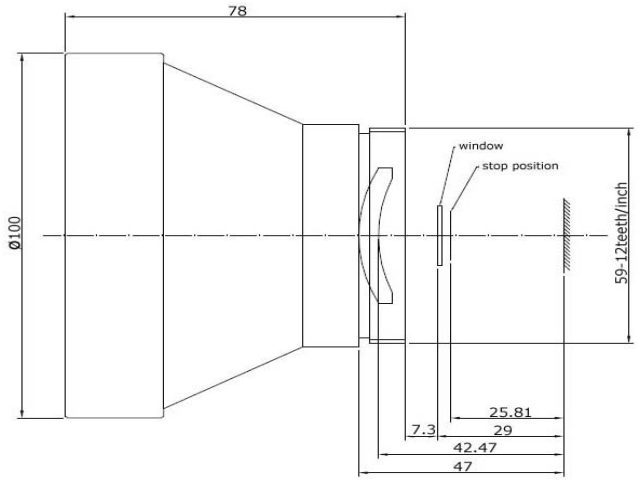

LWIR Lens 8-12μm

NEW

Part no.: IR10020640-B-MOT

Opto-Mechanic Property	Specification	Remarks
Focal Length	100mm	
F#	2.0	
Wavelength	8μm—12μm	
Image Diagonal	20mm	
Average Transmission	>85%	
Circular FOV	11.42°	
Back Focus Distance	45mm	
Back Working Distance	36.3mm	
Dimensions	Length75mm, Φ100mm	
Focus Type	Motorized Focus	
Focus Range	2m to infinity	
Mount Type	M59*12Teeth/inch	
Detector	640*480pixels, 25μm	
Weight	-	
Environmental		
Operating Temperature	-30°C to +60°C	
Storage Temperature	-40°C to +80°C	
External Coating	DLC	Diamond like coating
Humidity	100%RH at 26°C and 74%RH at 35°C for 24 hours	

Drawing

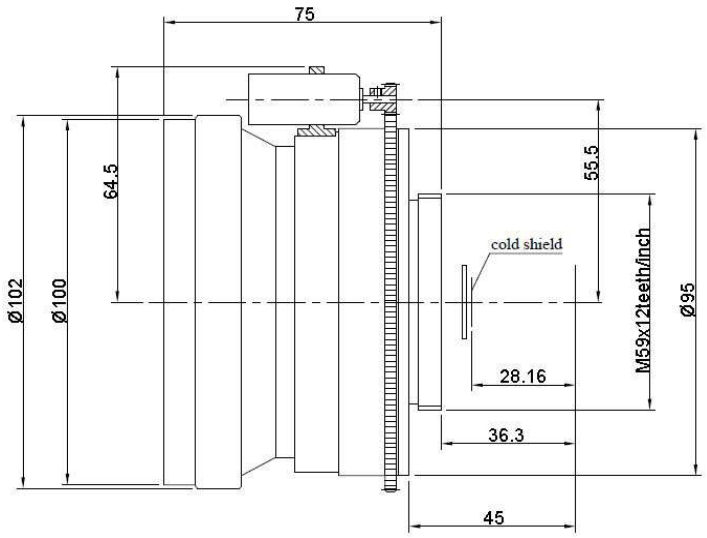

LWIR Lens 8-12µm

NEW

Part no.: IR01810640-B31

Opto-Mechanic Property	Specification	Remarks
Focal Length	18mm	
F#	1.0	
Wavelength	8µm—14µm	
Image Diagonal	20mm	
Average Transmission	90	
Circular FOV	58°	
Back Focus Distance	31mm	
Back Working Distance	18.9mm	
Dimensions	Length73.5mm, Φ67mm	
Focus Type	Manual Focus	
Focus Range	-	
Mount Type	M65*1	
Detector	640*480pixels, 25µm	
Weight	-	
Environmental		
Operating Temperature	-20°C to +60°C	
Storage Temperature	-40°C to +80°C	
External Coating	AR or DLC	Upon Request
Humidity	100%RH at 26°C and 74%RH at 35°C for 24 hours	

Drawing

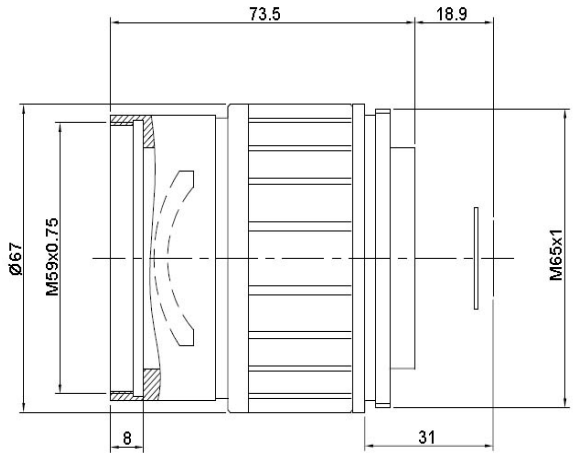

LWIR Lens 8-12μm

Part no.: IR05008640-B31-MOT

Opto-Mechanic Property	Specification	Remarks
Focal Length	50mm	
F#	0.8	
Wavelength	8μm—12μm	
Image Diagonal	20mm	
Average Transmission	90%@8-12μm	
Circular FOV	22.62°	
Back Focus Distance	31.1mm	
Back Working Distance	24.1mm	
Dimensions	Length67mm, Φ91mm	
Focus Type	Motorized Focus	
Focus Range	-	
Mount Type	M65*1	
Detector	640*480pixels, 25μm	
Weight	725g	
Motor Voltage	12V DC	
Environmental		
Operating Temperature	-20°C to +60°C	
Storage Temperature	-40°C to +80°C	
External Coating	AR or DLC	Upon Request
Humidity	100%RH at 26°C and 74%RH at 35°C for 24 hours	

Drawing

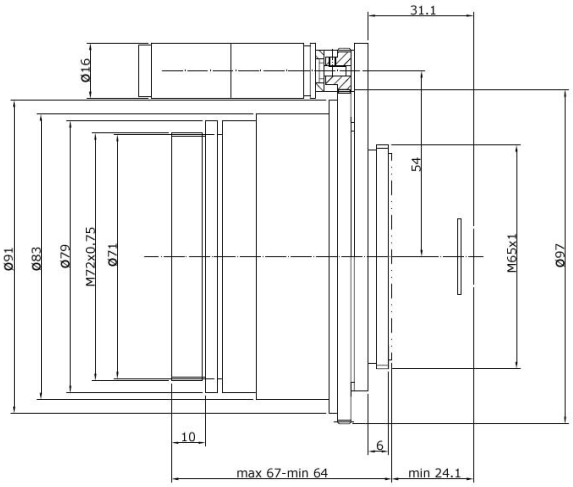

LWIR Lens 8-12μm

Part no.: IR07510640-B31-MOT

Opto-Mechanic Property	Specification	Remarks
Focal Length	75mm	
F#	1.0	
Wavelength	8μm—12μm	
Image Diagonal	20mm	
Average Transmission	>85%@8-12μm	
Circular FOV	15.19°	
Back Focus Distance	31.1mm	
Back Working Distance	19.1mm	
Dimensions	Length95.7mm, Φ86mm	
Focus Type	Motorized Focus	
Focus Range	2.5m to infinity	
Mount Type	M65*1	
Detector	640*480pixels, 25μm	
Weight	-	
Motor Voltage	12V DC	
Environmental		
Operating Temperature	-20°C to +60°C	
Storage Temperature	-40°C to +80°C	
External Coating	AR or DLC	Upon Request
Humidity	100%RH at 26°C and 74%RH at 35°C for 24 hours	

Drawing

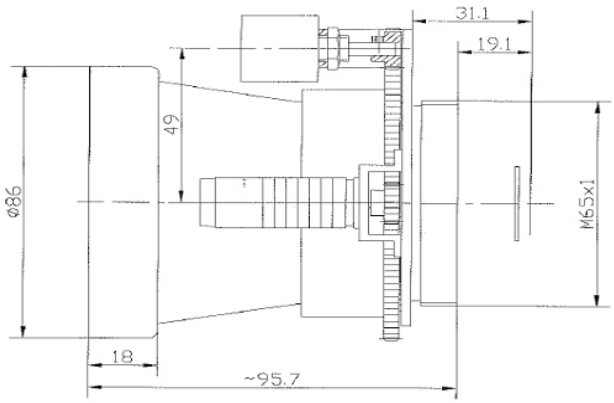

LWIR Lens 8-12μm

Part no.: IR10010640-B31-MOT

Opto-Mechanic Property	Specification	Remarks
Focal Length	100mm	
F#	1.0	
Wavelength	8μm—12μm	
Image Diagonal	20mm	
Average Transmission	>85%@8-12μm	
Circular FOV	11.42°	
Back Focus Distance	31.1mm	
Back Working Distance	18.5mm	
Dimensions	Length119.17mm, Φ112mm	
Focus Type	Motorized Focus	
Focus Range	-	
Mount Type	M65*1	
Detector	640*480pixels, 25μm	
Weight	-	
Motor Voltage	12V DC	
Environmental		
Operating Temperature	-20°C to +60°C	
Storage Temperature	-40°C to +80°C	
External Coating	AR or DLC	Upon Request
Humidity	100%RH at 26°C and 74%RH at 35°C for 24 hours	

Drawing

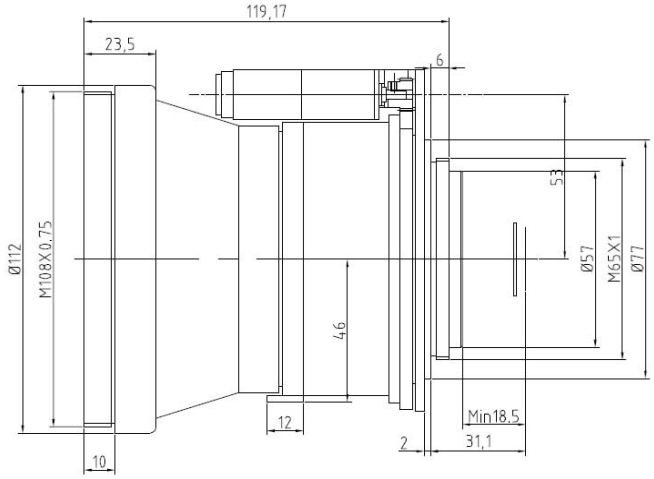

LWIR Lens 8-12μm

Part no.: IR15010640-B31-MOT

Opto-Mechanic Property	Specification	Remarks
Focal Length	150mm	
F#	1.0	
Wavelength	8μm—12μm	
Image Diagonal	20mm	
Average Transmission	>85%@8-12μm	
Circular FOV	11.42°	
Back Focus Distance	31.1mm	
Back Working Distance	23.58mm	
Dimensions	Length184.2mm, Φ170mm	
Focus Type	Motorized Focus	
Focus Range	20m to infinity	
Mount Type	M65*1	
Detector	640*480pixels, 25μm	
Weight	2425g	
Motor Voltage	12V DC	
Environmental		
Operating Temperature	-20°C to +60°C	
Storage Temperature	-40°C to +80°C	
External Coating	AR or DLC	Upon Request
Humidity	100%RH at 26°C and 74%RH at 35°C for 24 hours	

Drawing

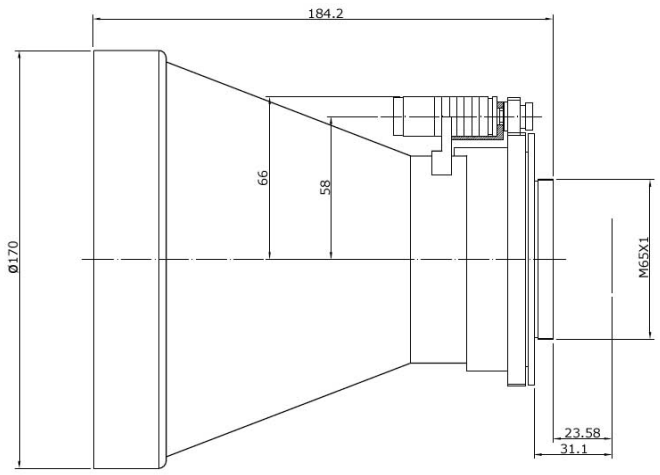

LWIR Lens 8-12μm

Part no.: IR25-1.0-4500

Opto-Mechanic Property	Specification	Remarks
Focal Length	25mm	
F#	1.0	
Wavelength	8μm—12μm	
Image Diagonal	12mm	
Average Transmission	>85%@8-12μm	
Circular FOV	26.99°	
Back Focus Distance	18.4mm	
Back Working Distance	14mm	
Dimensions	Length44~39mm, Φ53mm	
Focus Type	Manual Focus	
Focus Range	-	
Mount Type	1.3125-32UNS-2A	
Detector	320*240pixels, 30μm	
Weight	-	
Environmental		
Operating Temperature	-20°C to +60°C	
Storage Temperature	-40°C to +80°C	
External Coating	DLC	Diamond like coating
Humidity	100%RH at 26°C and 74%RH at 35°C for 24 hours	

Drawing

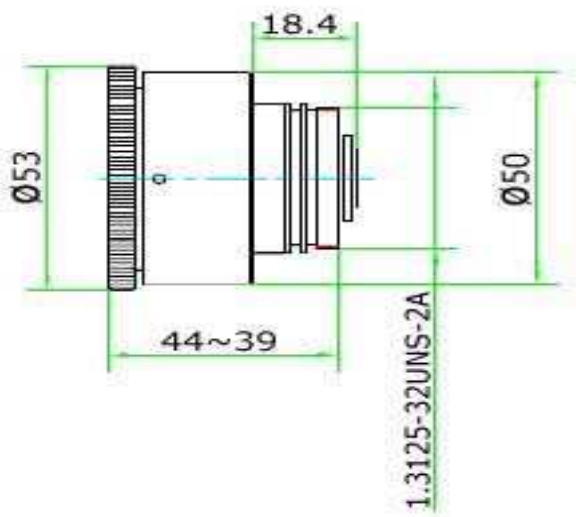

LWIR Lens 8-12μm

Part no.: IR50-0.8-4500-MOT

Opto-Mechanic Property	Specification	Remarks
Focal Length	50mm	
F#	0.8	
Wavelength	8μm—12μm	
Image Diagonal	16.8mm	
Average Transmission	>85%@8-12μm	
Circular FOV	19.07°	
Back Focus Distance	18.4mm	
Back Working Distance	3.9mm	
Dimensions	Length80mm, Φ71mm	
Focus Type	Motorized Focus	
Focus Range	-	
Mount Type	1.3125-32UNS-2A	
Detector	320*240pixels, 30μm	
	384*288pixels, 35μm	
Weight	-	
Motor Voltage	12V DC	
Environmental		
Operating Temperature	-20°C to +60°C	
Storage Temperature	-40°C to +80°C	
External Coating	DLC	Diamond like coating
Humidity	100%RH at 26°C and 74%RH at 35°C for 24 hours	

Drawing

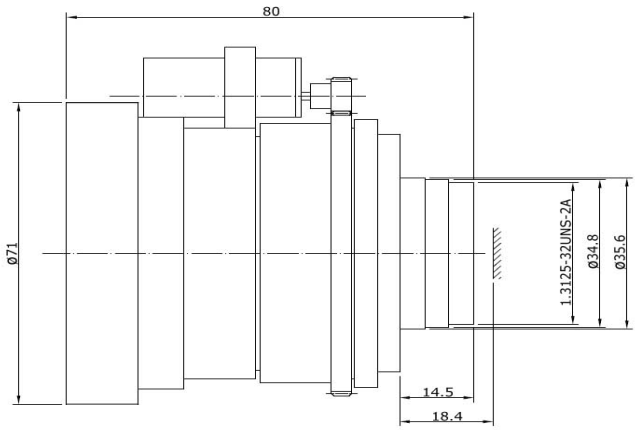

LWIR Lens 8-12µm

Part no.: IR75-1.0-4500-MOT

Opto-Mechanic Property	Specification	Remarks
Focal Length	75mm	
F#	1.0	
Wavelength	8µm—12µm	
Image Diagonal	12mm	
Average Transmission	>85%@8-12µm	
Circular FOV	9.15°	
Back Focus Distance	18.4mm	
Back Working Distance	Refer to drawing	
Dimensions	Length115.9mm, Φ89mm	
Focus Type	Motorized Focus	
Focus Range	-	
Mount Type	1.3125-32UNS-2A	
Detector	320*240pixels, 30µm	
Weight	700g	
Motor Voltage	12V DC	
Environmental		
Operating Temperature	-20°C to +60°C	
Storage Temperature	-40°C to +80°C	
External Coating	DLC	Diamond like coating
Humidity	100%RH at 26°C and 74%RH at 35°C for 24 hours	

Drawing

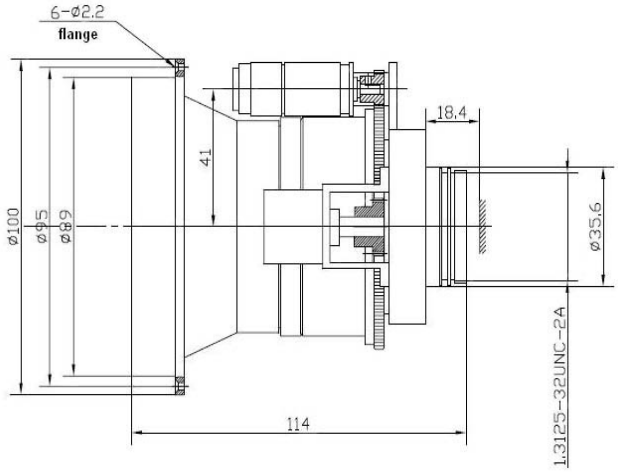

LWIR Lens 8-12μm

Part no.: IR100-1.0-4500-MOT

Opto-Mechanic Property	Specification	Remarks
Focal Length	100mm	
F#	1.0	
Wavelength	8μm—12μm	
Image Diagonal	16.8mm	
Average Transmission	>85%@8-12μm	
Circular FOV	9.6°	
Back Focus Distance	18.4mm	
Back Working Distance	Refer to drawing	
Dimensions	Length145.2mm, Φ112mm	
Focus Type	Motorized Focus	
Focus Range	-	
Mount Type	1.3125-32UNC-2A	
Detector	384*288pixels, 35μm	
Weight	-	
Motor Voltage	12V DC	
Environmental		
Operating Temperature	-20°C to +60°C	
Storage Temperature	-40°C to +80°C	
External Coating	DLC	Diamond like coating
Humidity	100%RH at 26°C and 74%RH at 35°C for 24 hours	

Drawing

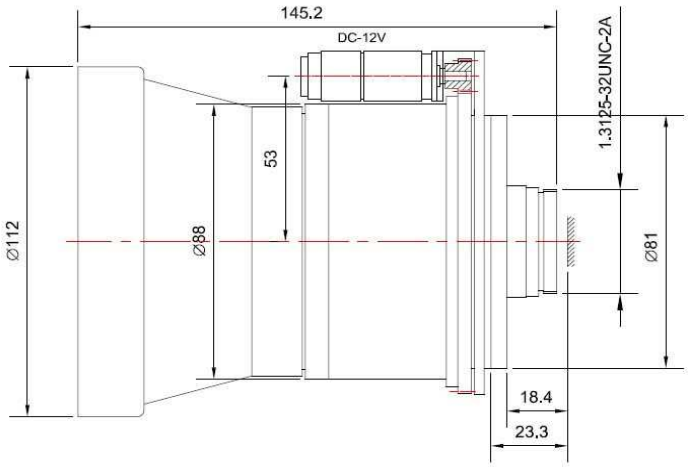

LWIR Lens 8-12μm

Part no.: IR150-1.0-4500-MOT

Opto-Mechanic Property	Specification	Remarks
Focal Length	150mm	
F#	1.0	
Wavelength	8μm—12μm	
Image Diagonal	16.8mm	
Average Transmission	>85%@8-12μm	
Circular FOV	9.6°	
Back Focus Distance	8.75mm	
Back Working Distance	Refer to Drawing	
Dimensions	Length227.42mm, Φ166mm	
Focus Type	Motorized Focus	
Focus Range	-	
Mount Type	1.3125-32UNC-2A	
Detector	320*240pixels, 30μm	
	384*288pixels, 35μm	
Weight	-	
Motor Voltage	12V DC	
Environmental		
Operating Temperature	-20°C to +60°C	
Storage Temperature	-40°C to +80°C	
External Coating	DLC	Diamond like coating
Humidity	100%RH at 26°C and 74%RH at 35°C for 24 hours	

Drawing

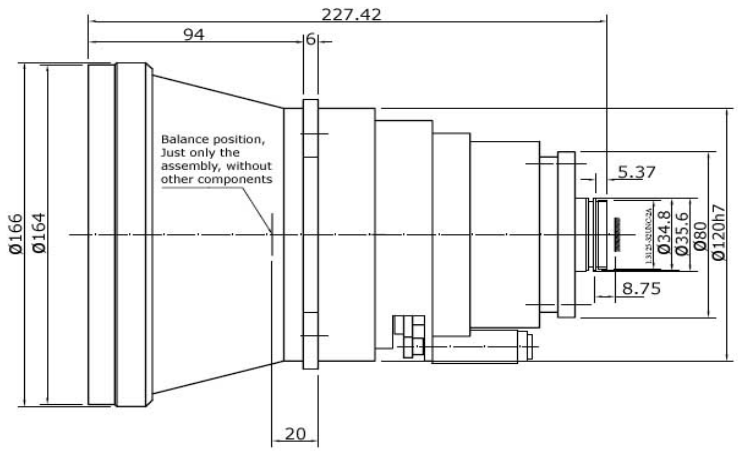

LWIR Lens 8-12μm

NEW

Part no.: IR50-1.0-1024

Opto-Mechanic Property	Specification	Remarks
Focal Length	50mm	
F#	1.0	
Wavelength	8μm—12μm	
Image Diagonal	24.62mm	
Average Transmission	>85%@8-12μm	
Circular FOV	28°	
Back Focus Distance	16mm	
Back Working Distance	8mm	
Dimensions	Length68mm, Φ66mm	
Focus Type	Manual Focus	
Focus Range	-	
Mount Type	M59*12teeth/inch	
Detector	1024*1024pixels, 17μm	
Weight	-	
Environmental		
Operating Temperature	-20°C to +60°C	
Storage Temperature	-40°C to +80°C	
External Coating	DLC	Diamond like coating
Humidity	100%RH at 26°C and 74%RH at 35°C for 24 hours	

Drawing

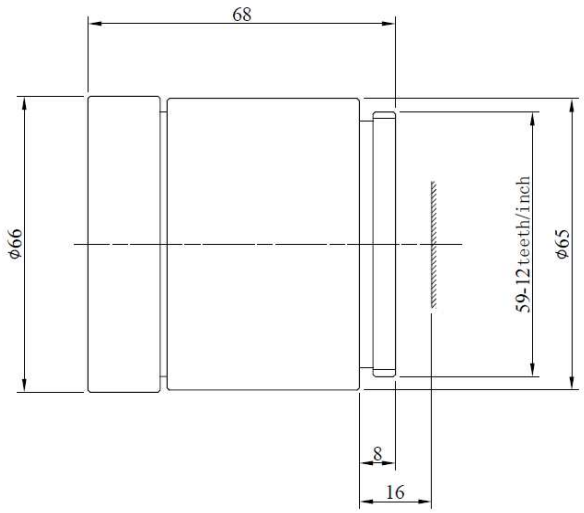

IR2FV Lens Double Field View

Our Dual Focus IR Imaging lens offers enhancements for obtaining two images of a scene, each image having a different field of view. It's layout is based on four IR lens; a frontal dual focus lens with movable two middle lenses. Our designed is for long IR region (8um - 12um). It is developed to cater a camera with zooming functionality with two distinct fields. This is a superior design that has minimized the size of the mount lenses compared with other type of zooming.

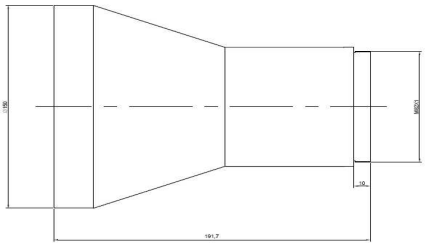

Outline Diagram

The outer surface lens is coated with Hard Diamond coating to resist the various harsh environment conditions. The system it self will be mounted with aluminum mounts for high versatility.

The following is the MTF performance for IR2FV18060

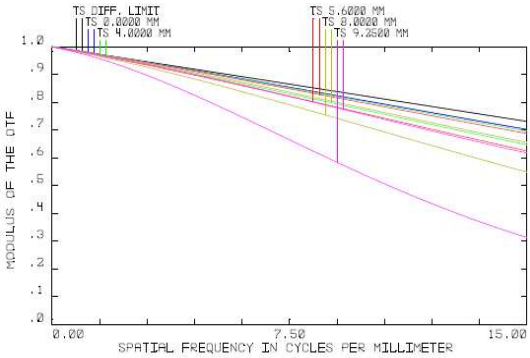

MTF Diagram

Applications:

This lens are tested for the following parameters: effective focal length, back-working distance, MTF, transmission , and physical conformity in order to meet a set of specifications. Since this is commonly used for security or even military applications.

The following are sample pictures of 2 different zooming fields as shown to focus on certain area of interest.

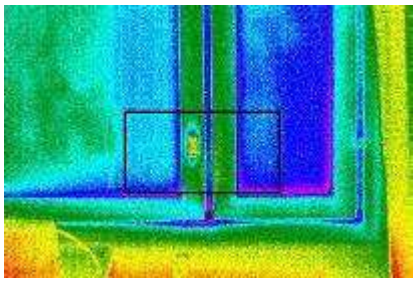

Original picture at wide FOV

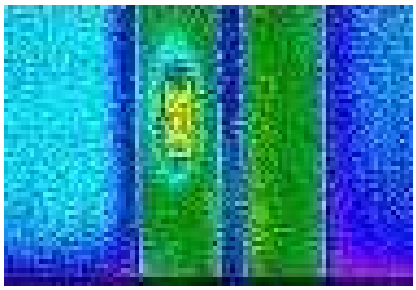

Original picture at narrow

IRM2FV Lens Double Field View

Part no.: IRM2FV15050

Opto-Mechanic Property	Specification	Remarks
Focal Length	150mm/50mm	
F#	4.0	
Wavelength	3.6—4.9μm	
Image Diagonal	12mm	
Average Transmission	>80%	
Circular FOV	4.6°/13.8°	
Back Focus Distance	35.81mm	
Back Working Distance	25.81mm	
Dimensions	Length128mm, Φ113mm	
Focus Type	Manual Focus	
Focus Range	2m to infinity	
Mount Type	M71*1	
Detector	320*240pixels, 30μm	
Weight	-	
Environmental		
Operating Temperature	-20°C to +60°C	
Storage Temperature	-40°C to +80°C	
External Coating	DLC	Diamond like coating
Humidity	100%RH at 26°C and 74%RH at 35°C for 24 hours	

Drawing

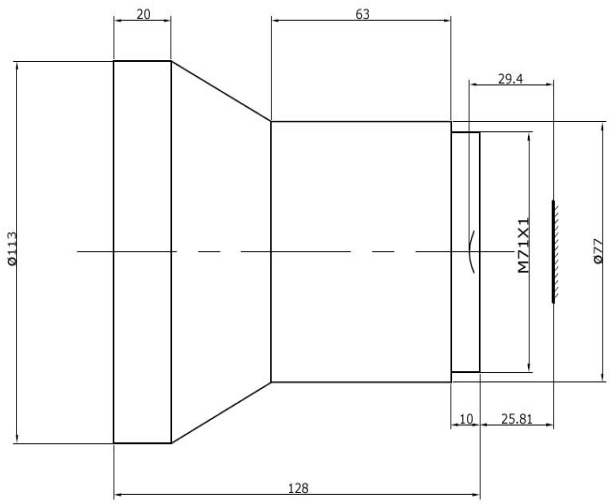

IR2FV Lens Double Field View

Part no.: IR2FV18060

Opto-Mechanic Property	Specification	Remarks
Focal Length	180mm/60mm	
F#	1.4	
Wavelength	8μm—12μm	
Image Diagonal	18mm	
Average Transmission	>95%	
Circular FOV	5.9°/18.5°	
Back Focus Distance	Refer to drawing	
Back Working Distance	10mm	
Dimensions	Length191.7mm, Φ150mm	
Focus Type	Manual Focus	
Focus Range	-	
Mount Type	M82*1	
Detector Type	320*240pixels, 45μm	
Weight	2700g	
Environmental		
Operating Temperature	-20°C to +60°C	
Storage Temperature	-40°C to +80°C	
External Coating	DLC	Diamond like coating
Humidity	100%RH at 26°C and 74%RH at 35°C for 24 hours	

Drawing

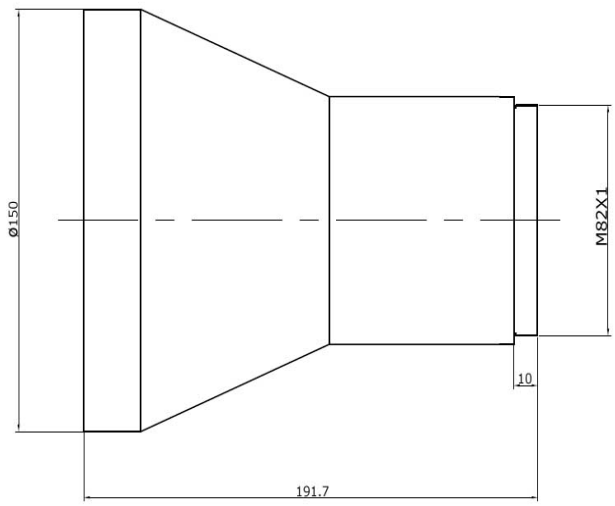

IR2FV Lens Double Field View

Part no.: IR2FV07522

Optical Property	Specification		Remarks
Focal Length	22mm	75mm	Dual Field
F#	1.1	1.2	
Wavelength	7μm—14μm		
Average Transmission	>80% (DLC)		Average
HFOV	25.5° (9.6mm)	7.1° (9.6mm)	
BFL	17mm		Including 1mm Ge Window
Image Format	320x240,38μm; 384*288,25μm; 320x240,25μm		
Focus Range	Min. 3m	Min. 10m	
Distortion	<5%	<2%	
Mechanical			
Mount Type	Flange		Mount Drawing
Focus Type	Motorized Focus		
Dimensions	Length99mm, Φ72mm, Height107mm		
FOV Switch Time	<1s		
Weight	800g		
Electrical			
Lens Control	Designated Lens Controller		
Drive Voltage	12V DC, 1.0A Max		Encoder Motor
Communication Interface	RS422/232		
Communication Protocol	As per attached Document		
Environmental			
Sealing	IP67		
Operating Temperature	-30°C to +60°C		
Storage Temperature	-40°C to +70°C		
External Coating	DLC		Diamond like Coating
Humidity	100%RH at 26°C and 74%RH at 35°C for 24 hours		

IR2FV Lens Double Field View

Part no.: IR2FV07522

	HFOV	160x120	320x240	384x288	640x480
WFOV (22mm)	38μm				
	30μm	12.4°	25.5°		
	25μm	10.5°	21°	25.5°	
NFOV (75mm)	38μm				
	30μm	3.6°	7.1°		
	25μm	3.0°	6.0°	7.1°	

Drawing

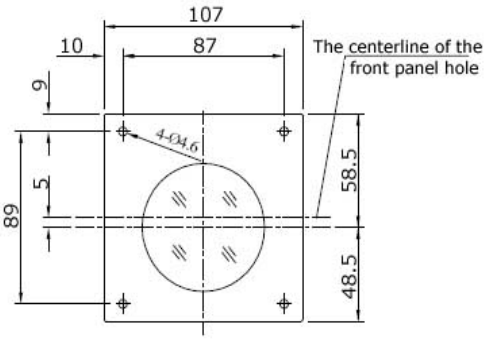

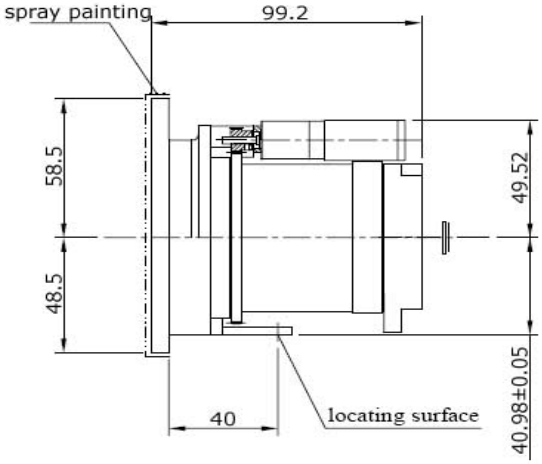

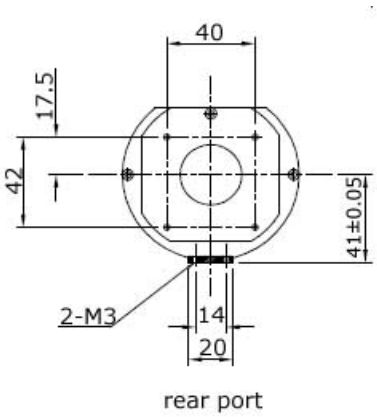

IR2FV Lens Double Field View

Part no.: IR2FV15050

Optical Property	Specification		Remarks
Focal Length	50mm	150mm	Dual Field
F#	1.4	1.4	
Wavelength	7μm—14μm		
Average Transmission	>80% (DLC)		Average
HFOV	14.3° (12.16mm)	4.6° (12.16mm)	
BFL	66mm		Including 1mm Ge Window
Image Format	320*240,38μm; 384*288,25μm; 320*240,25μm		
Focus Range	Min. 5m	Min. 30m	
Distortion	<5%	<2%	
Mechanical			
Mount Type	Flange		Mount Drawing
Focus Type	Motorized Focus		
Dimensions	Length218mm, Φ134mm		
FOV Switch Time	<2s		
Weight	2700g		
Electrical			
Lens Control	Designated Lens Controller		
Drive Voltage	12V DC 1.0A Max		Encoder Motor
Communication Interface	RS422/232		
Communication Protocol	As per attached Document		
Environmental			
Sealing	IP67		
Operating Temperature	-30°C to +60°C		
Storage Temperature	-40°C to +70°C		
External Coating	DLC		Diamond like Coating
Humidity	100%RH at 26°C and 74%RH at 35°C for 24 hours		

IR2FV Lens Double Field View

Part no.: IR2FV15050

	HFOV	160x120	320x240	384x288	640x480
WFOV (50mm)	38µm	7.0°	14.3°		
	30µm	5.6°	11.2°		
	25µm	4.6°	9.3°	11.2°	
NFOV (150mm)	38µm	2.3°	4.6°		
	30µm	1..8°	3.7°		
	25µm	1.5°	3.1°	3.7°	

Drawing

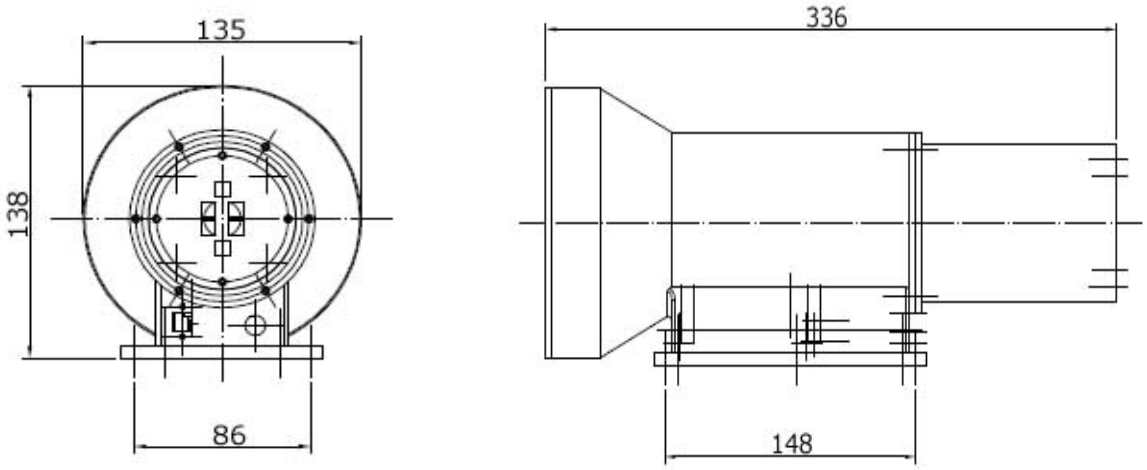

IR2FV Lens Double Field View

Part no.: IR2FV17644

Optical Property	Specification		Remarks
Focal Length	44mm	176mm	Dual Field
F#	1.0	1.2	
Wavelength	7μm—14μm		
Average Transmission	>80% (DLC)		Average
HFOV	15.8° (12.16mm)	4.0° (12.16mm)	
BFL	27.1mm		Including 1mm Ge Window
Image Format	320*240,38μm; 384*288,25μm; 320*240,25μm; 640*240,25μm		
Focus Range	Min. 5m	Min. 30m	
Distortion	<5%	<2%	
Mechanical			
Mount Type	Flange		Mount Drawing
Focus Type	Motorized Focus		
Dimensions	Length171mm, Φ222mm, Height178mm		
FOV Switch Time	<2s		
Weight	3500g		
Electrical			
Lens Control	Designated Lens Controller		
Drive Voltage	12V DC, 1.0A Max		Encoder Motor
Communication Interface	RS422/232		
Communication Protocol	As per attached Document		
Environmental			
Sealing	IP67		
Operating Temperature	-30°C to +60°C		
Storage Temperature	-40°C to +70°C		
External Coating	DLC		Diamond like Coating
Humidity	100%RH at 26°C and 74%RH at 35°C for 24 hours		

IR2FV Lens Double Field View

Part no.: IR2FV17644

	HFOV	160x120	320x240	384x288	640x480
WFOV (44mm)	38µm	7.9°	15.8°		
	30µm	6.2°	12.5°		
	25µm	5.2°	10.4°	12.5°	21°
NFOV (176mm)	38µm	2.4°	4.9°		
	30µm	1.9°	3.8°		
	25µm	1.6°	3.2°	3.8°	5.2°

Drawing

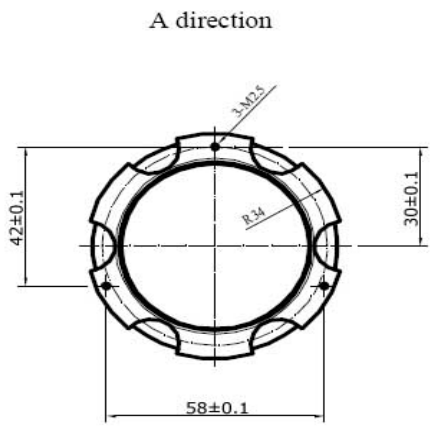

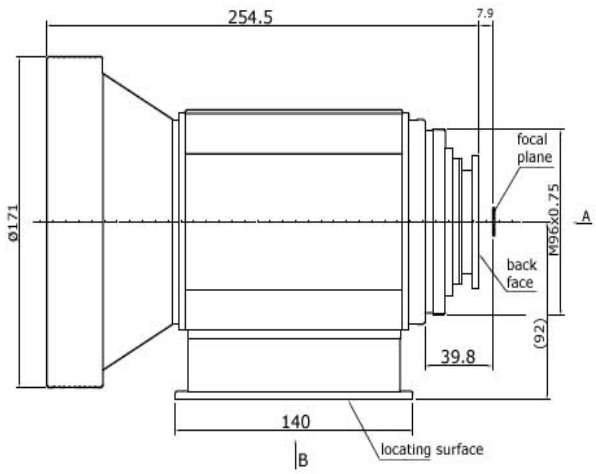

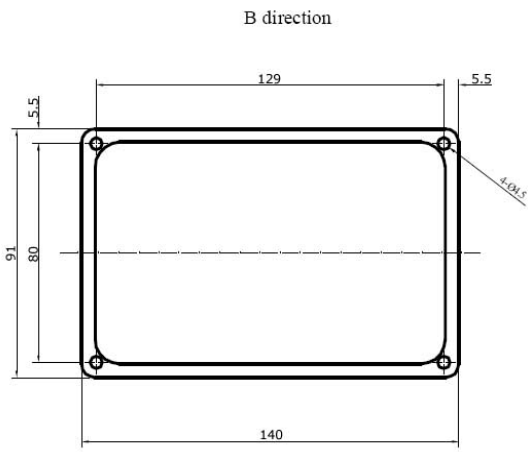

IR2FV Lens Double Field View

Part no.: IR2FV143-35.75-384

Optical Property	Specification		Remarks
Focal Length	35.75mm	143mm	Dual Field
F#	1.0	1.1	
Wavelength	7μm—14μm		
Average Transmission	>80%		Average
Horizontal FOV	15.4° (9.6mm)	3.8° (9.6mm)	
BFL	18.7mm	18.7mm	Including 1mm Ge Window
Image Format	320x240,38μm; 384*288,25μm; 320*240,25μm		
Focus Range	Min. 5m	Min. 30m	
Distortion	<5%	<2%	
Mechanical			
Mount Type	Flange		Mount Drawing
Focus Type	Motorized Focus		
Dimensions	Length169mm, Φ145mm, Height151mm		
FOV Switch Time	<2s		
Weight	2100g		
Electrical			
Lens Control	Designated lens controller		
Power Input	12V DC, 1.0A Max		Encoder Motor
Communication Interface	RS422/232		
Communication Protocol	As per attached document		
Environmental			
Sealing	IP67		
Operating Temperature	-30°C to +55°C		
Storage Temperature	-40°C to +70°C		
External Coating	DLC		Diamond like coating
Humidity	100%RH at 26°C and 74%RH at 35°C for 24 hours		

IR2FV Lens Double Field View

Part no.: IR2FV143-35.75-384

	HFOV	160x120	320x240	384x288	640x480
WFOV (35.75mm)	38µm	9.6°	19.6°		
	30µm	7.6°	15.4°		
	25µm	6.3°	12.8°	15.4°	
NFOV (143mm)	38µm	2.4°	4.9°		
	30µm	1.9°	3.8°		
	25µm	1.6°	3.2°	3.8°	

Drawing

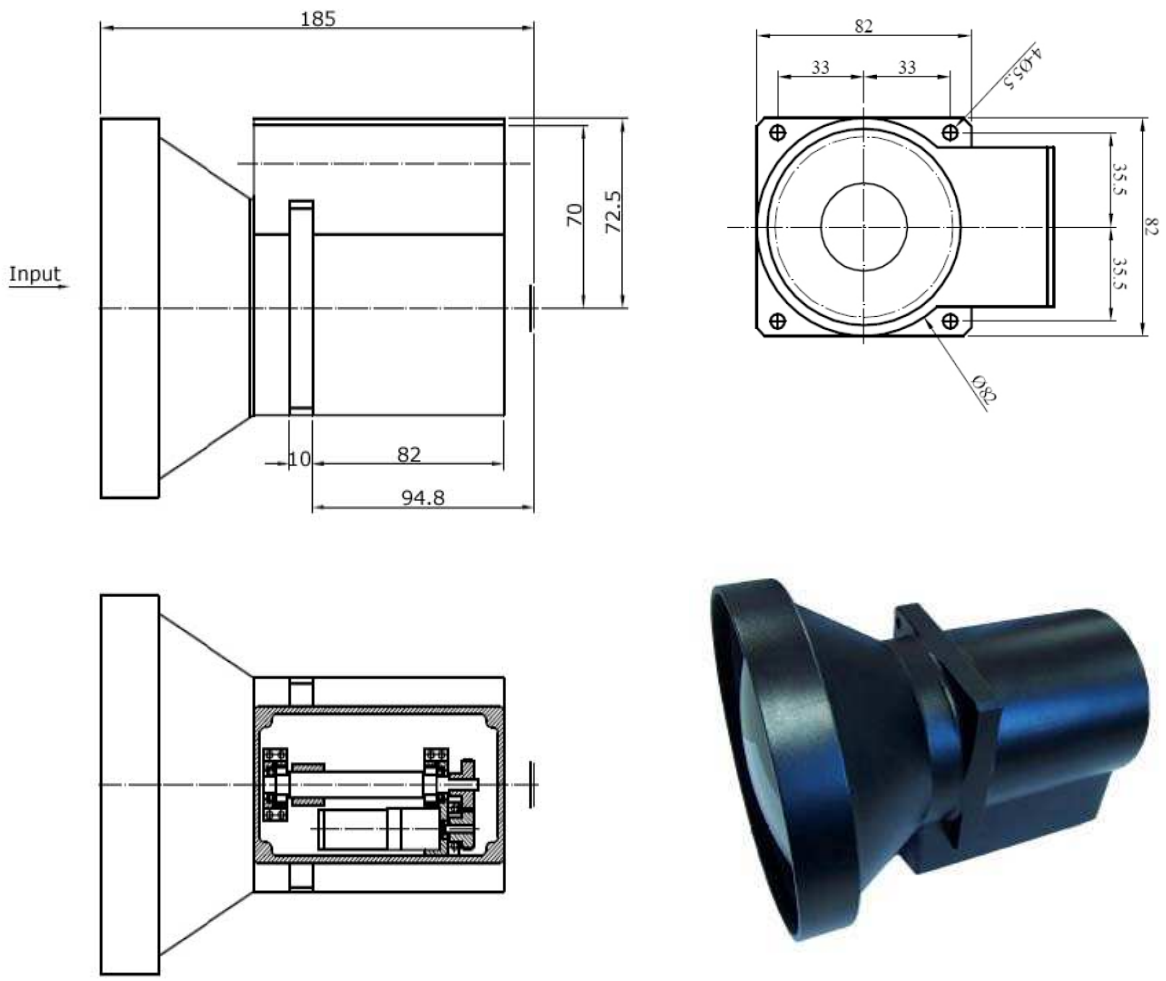

IR Zoom Lens

In order to cater the need of continuous zooming rather than two distinct magnifications, Wavelength Technology delivers the IR Zoom Lens. The design is developed for long IR range (8-12um) with zoom ratio of 1 to 3 times continuously.

The system EFL is between 33 to 100mm. The F number is 1 with FOV 30.5 to 10.3 degrees. The following is its MTF performance

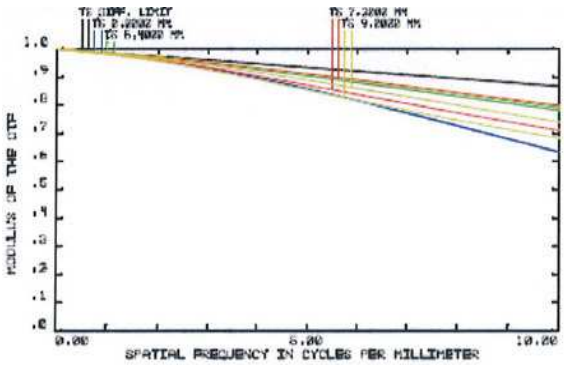

MTF Diagram

A picture shown below used the IRZ10010320 zoom lens.

Increasing magnification requires longer EFL and results in smaller FOV

Applications:

IR Zoom Lens are used in commercial, medical and surveillance applications. It is extensively used in aerial platforms, both for targeting systems and infrared search and track.

IR Zoom Lens

NEW

Part no.: IRZ88176830

Opto-Mechanic Property	Specification	Remarks
Focal Length	88mm—176mm	
F#	5.0	
Wavelength	830nm-1000nm	
Image Diagonal	17.38mm	
Average Transmission	>91%	
Circular FOV	11.3°-5.65°	
Back Focus Distance	17.5mm	
Back Working Distance	-	
Dimensions	Length205.8mm, Φ78mm	
Focus Type	Motorized Focus	
Focus Range	-	
Mount Type	25.4-32teeth/inch	
Detector	512*512pixels,24μm	
Weight	-	
Environmental		
Operating Temperature	-20°C to +60°C	
Storage Temperature	-40°C to +80°C	
External Coating	DLC	Diamond like coating
Humidity	100%RH at 26°C and 74%RH at 35°C for 24 hours	

Drawing

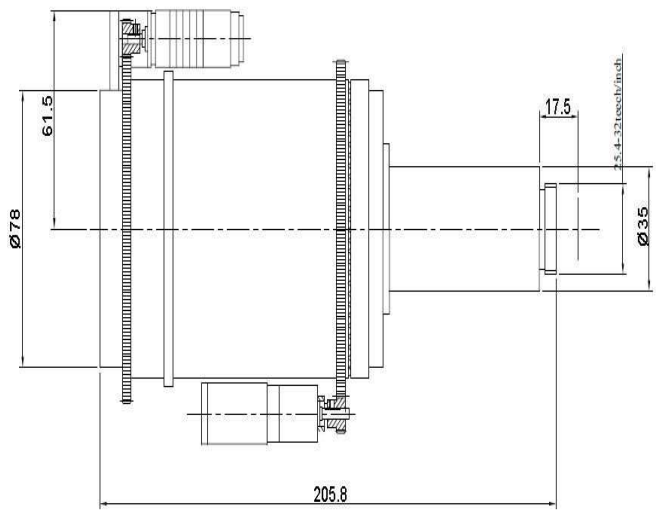

IR Zoom Lens

Part no.: IRZ10010320

Opto-Mechanic Property	Specification	Remarks
Focal Length	33mm—100mm	
F#	1.0	
Wavelength	8μm—12μm	
Image Diagonal	7mm	
Average Transmission	>91%	
Circular FOV	30.5°--10.3°	
Back Focus Distance	13.56mm	
Back Working Distance	5.56mm	
Dimensions	Length195.2mm, Φ120mm	
Focus Type	Manual Focus	
Focus Range	1m to infinity	384*288pixels, 35μm
Mount Type	M54*1	320*240pixels, 45μm
Detector	160*120pixels,35μm	
Weight	-	
Environmental		
Operating Temperature	-20°C to +60°C	
Storage Temperature	-40°C to +80°C	
External Coating	DLC	Diamond like coating
Humidity	100%RH at 26°C and 74%RH at 35°C for 24 hours	

Drawing

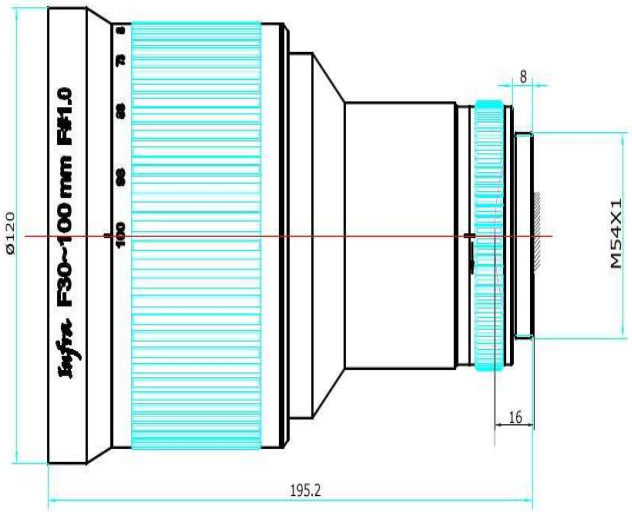

IR Zoom Lens

Part no.: IRZ25110320

Optical Property	Specification		Remarks
Focal Length	25mm	110mm	Continuous Zoom Lens
F#	1.0		
Wavelength	7μm—14μm		
Image Format	320*240, 38μm; 384*288,25μm, 320*240,25μm		
Transmission	>80% (DLC)		Average
HFOV	28.2° (12.16mm)	6.3° (12.16mm)	
Distortion	<5%	<1%	
BFL	20.3mm		Including 1mm Ge window
Focus Type	Motorized Focus		
Focus Range	Min. 3m	Min. 15min	
Mechanical			
Mount Type	Flange		(See Drawing)
Dimension	Length218.15mm, Φ160mm		
Weight	2980g		
Focus Time	<4s		
Zoom Time	<6s		
Electrical			
Focus Motor	12V DC	6~15V	
Zoom Motor	6V DC	4~12V	
Potentiometer			Upon Request
Environmental			
Sealing	IP67		Front lens
Operating Temperature	-20°C to +60°C		
Storage Temperature	-40°C to +70°C		
External Coating	DLC		Diamond Like Coating
Humidity	100%RH at 26°C and 74%RH at 35°C for 24 hours		

IR Zoom Lens

Part no.: IRZ25110320

	HFOV	160x120	320x240	384x288	640x480
WFOV (25mm)	38µm	14.1°	28.2°		
	30µm	11.1°	22.2°		
	25µm	9.2°	18.4°	22.2°	
NFOV (110mm)	38µm	3.2°	6.3°		
	30µm	2.5°	5.0°		
	25µm	2.1°	4.2°	5.0°	

Drawing

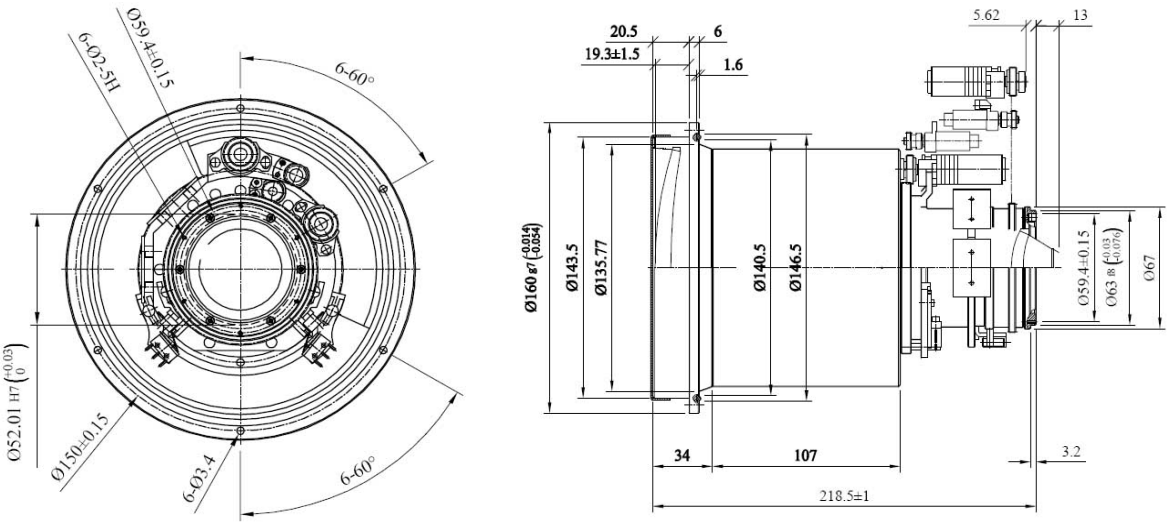

IR Zoom Lens

Part no.: IRZ44176320

Optical Property	Specification		Remarks
Focal Length	44mm	176mm	Continuous Zoom Lens
F#	1.0	1.2	
Wavelength	7μm—14μm		
Image Format	320*240, 38μm; 384*288,25μm, 320*240,25μm		
Transmission	>80% (DLC)		Average
HFOV	15.8° (12.16mm)	4.0° (12.16mm)	
Distortion	<5%	<2%	
BFL	22.92mm		Including 1mm Ge Window
Focus Type	Motorized Focus		
Focus Range	Min. 5m	Min. 30min	
Mechanical			
Mount Type	Flange		(See Drawing)
Dimension	Length378mm, Φ194mm		
Weight	3800g		
Focus Time	<4s		
Zoom Time	<6s		
Electrical			
Focus Motor	12V DC	9~15V	
Zoom Motor	12V DC	9~12V	
Environmental			
Sealing	IP67		
Operating Temperature	-20°C to +60°C		
Storage Temperature	-40°C to +70°C		
External Coating	DLC		Diamond Like Coating
Humidity	100%RH at 26°C and 74%RH at 35°C for 24 hours		

IR Zoom Lens

Part no.: IRZ44176320

	HFOV	160x120	320x240	384x288	640x480
WFOV (44mm)	38μm	7.9°	15.8°		
	30μm	6.2°	12.5°		
	25μm	5.2°	10.4°	12.5°	
NFOV (176mm)	38μm	2.4°	4.9°		
	30μm	1.9°	3.8°		
	25μm	1.6°	3.2°	3.8°	

Drawing

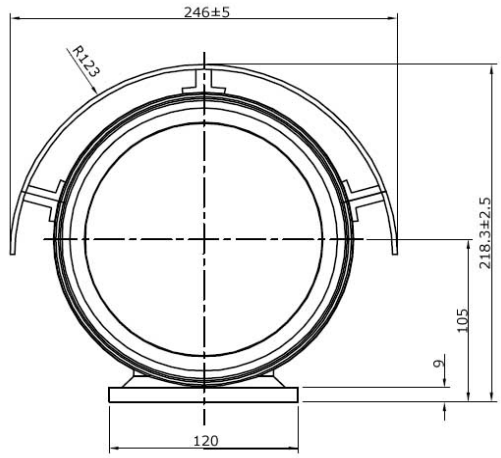

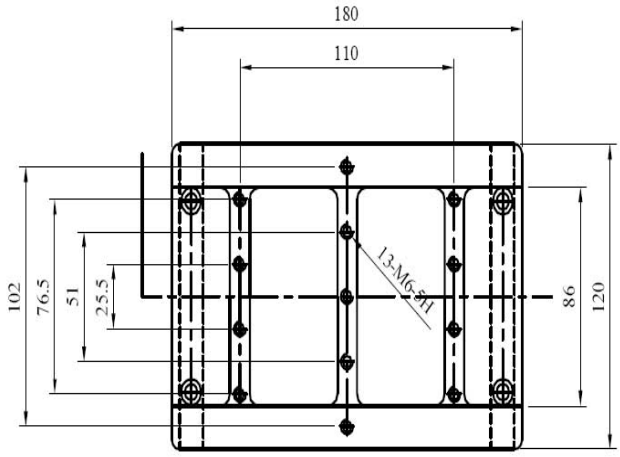

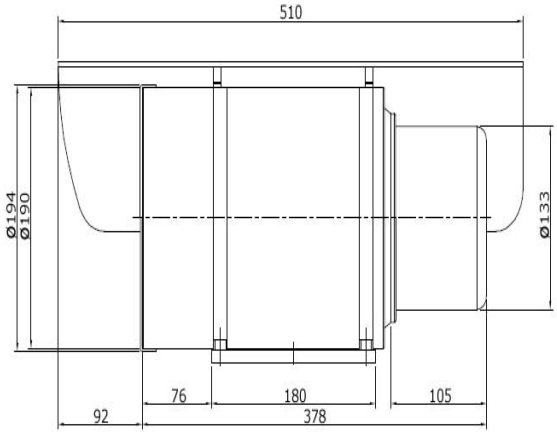

IR Zoom Lens

Part no.: IRZ331004500

Optical Property	Specification		Remarks
Focal Length	33mm	100mm	Continuous Zoom Lens
F#	1.0		
Wavelength	7μm—14μm		
Image Format	320*240, 388μm; 384*288,25μm, 320*240,25μm		
Transmission	>80% (DLC)		Average
HFOV	21.1° (12.16mm)	7.0° (12.16mm)	
Distortion	<5%	<1%	
BFL	20.6mm		Including 1mm Ge window
Focus Type	Motorized Focus		
Focus Range	Min. 3m	Min. 15min	
Mechanical			
Mount Type	Flange		(See Drawing)
Dimension	Length188.4mm, Φ140mm		
Weight	2250g		
Focus Time	<4s		
Zoom Time	<7s		
Electrical			
Focus Motor	12V DC	6~15V	
Zoom Motor	6V DC	4~12V	
Potentiometer			Upon Request
Environmental			
Sealing	IP67		Front lens
Operating Temperature	-20°C to +60°C		
Storage Temperature	-40°C to +70°C		
External Coating	DLC		Diamond Like Coating
Humidity	100%RH at 26°C and 74%RH at 35°C for 24 hours		

IR Zoom Lens

Part no.: IRZ331004500

	HFOV	160x120	320x240	384x288	640x480
WFOV (33mm)	38μm	10.5°	21.1°		
	30μm	8.3°	16.6°		
	25μm	6.9°	13.8°	16.6°	
NFOV (100mm)	38μm	3.5°	7.0°		
	30μm	2.7°	5.5°		
	25μm	2.3°	4.6°	5.5°	

Drawing

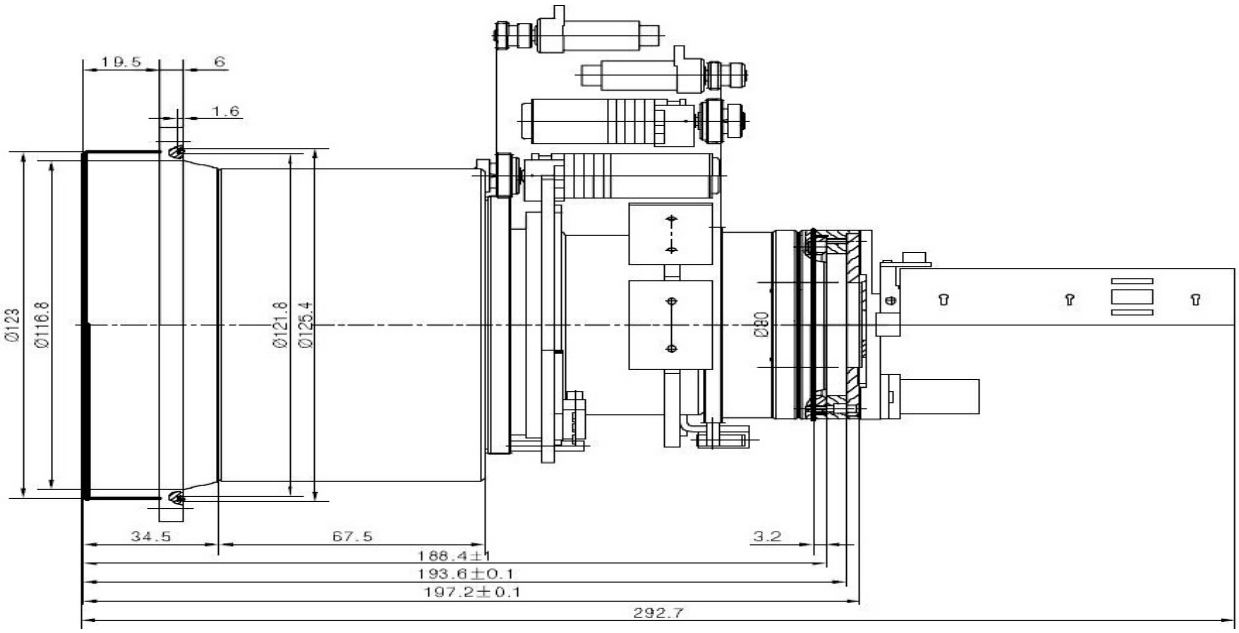

IR Athermal Lens

The need to maintain focus over a wide change of environmental temperature is essential to the system performance stability and high quality. So we have added a new series of IR Athermal Lens. It's performance are kept from changing by means of optical passivity, mechanical activity and mechanical passivity in a large temperature range. It's configuration will auto-adjust itself when placed at different temperature.

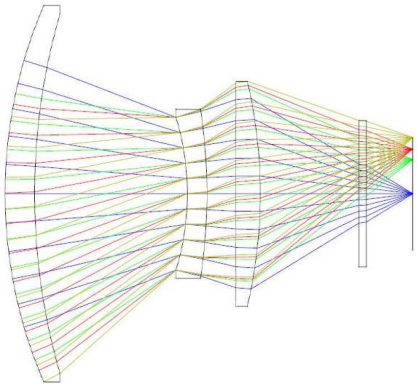

Every lens will expand or shrink whenever the surrounding temperature is increased or decreased. The design configuration of the lenses enables you to adjust the distance of the lenses to compensate temperature changes. In the end, the Athermal Lenses will give you the same performance in different temperatures.

Our design is developed for long IR region (8-12um). It is design to maintain focus position during changes in the environment temperature between –40 degrees to 85 degrees Celcius.

The outer most lens is coated with Hard Diamond coating suitable for harsh environment conditions. The following is its MTF performance.

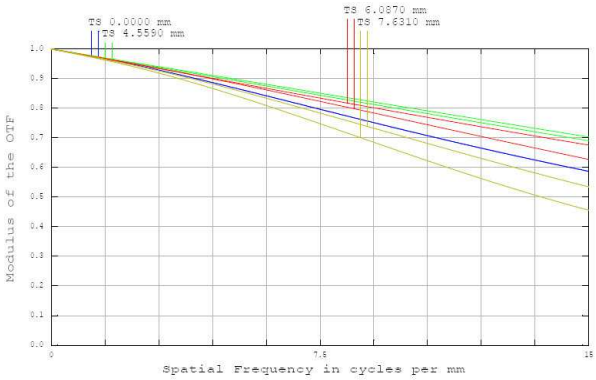

MTF Diagram

Our athermal lens design can be customized to meet your requirement.

Applications:

This lenses are commonly used for security applications where system access is limited . It is capable to maintain the focus as environment temperature changes.

IR Athermal Lens

Part no.: IRMA13020320

Opto-Mechanic Property	Specification	Remarks
Focal Length	130mm	
F#	2.0	
Wavelength	3μm—5μm	
Image Diagonal	12mm	
Average Transmission	90%	
Circular FOV	5.29°	
Back Focus Distance	Refer to drawing	
Back Working Distance	30mm	Including 2.5mm Ge window
Dimensions	Length73mm, Φ84mm	
Focus Type	Manual Focus	
Focus Range	-	
Mount Type	M34*0.5	
Detector Type	320*240pixels, 30μm	
Weight	350g	
Environmental		
Operating Temperature	-30°C to +50°C	
Storage Temperature	-40°C to +80°C	
External Coating	AR	Anti-Reflection Coating
Humidity	100%RH at 26°C and 74%RH at 35°C for 24 hours	

Drawing

IR Athermal Lens

Part no.: IRA03514320

Opto-Mechanic Property	Specification	Remarks
Focal Length	35mm	
F#	1.4	
Wavelength	8μm—12μm	
Image Diagonal	15.2mm	
Average Transmission	>88%	
Circular FOV	24.5°	
Back Focus Distance	11.02mm	
Back Working Distance	7.96mm	
Dimensions	Length42mm, Φ43mm	
Focus Type	Manual Focus	
Focus Range	-	
Mount Type	M34*0.5	
Detector Type	320*240pixels, 38μm	
Weight	100g	
Environmental		
Operating Temperature	-30°C to +60°C	
Storage Temperature	-40°C to +80°C	
External Coating	DLC	Diamond like coating
Humidity	100%RH at 26°C and 74%RH at 35°C for 24 hours	

Drawing

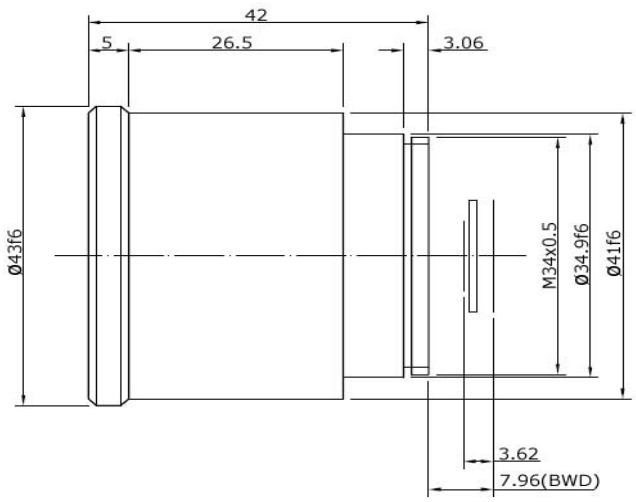

IR Athermal Lens

NEW

Part no.: IRA07510648

Opto-Mechanic Property	Specification	Remarks
Focal Length	75mm	
F#	1.0	
Wavelength	8μm—12μm	
Image Diagonal	19mm	
Average Transmission	>90%	
Circular FOV	14.44°	
Back Focus Distance	41.92mm	
Back Working Distance	30.19mm	
Dimensions	Length99.45mm, Φ128mm	
Focus Type	Manual Focus	
Focus Range	-	
Mount Type	M107*0.75	
Detector Type	648*488pixels, 23.5μm	
Weight	100g	
Environmental		
Operating Temperature	-30°C to +60°C	
Storage Temperature	-40°C to +80°C	
External Coating	AR	Anti-Reflection coating
Humidity	100%RH at 26°C and 74%RH at 35°C for 24 hours	

Drawing

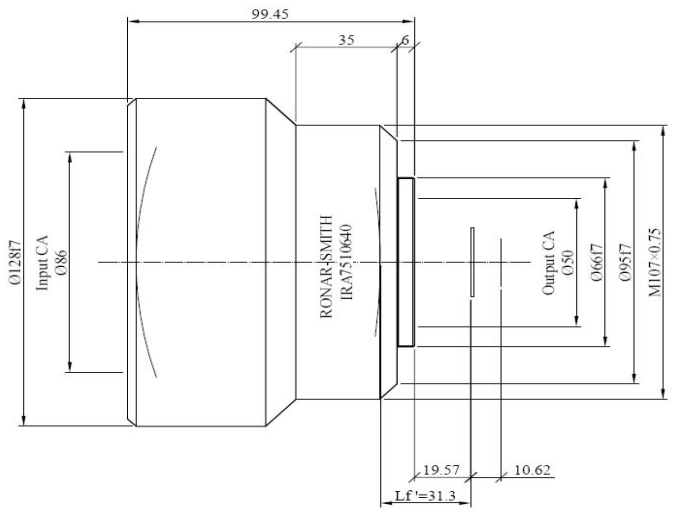

IR Objective Lens

NEW

Part no.: IR2.2X

Opto-Mechanic Property	Specification	Remarks
Magnification	2.2X	
F#	1.85	
Wavelength	8μm—14μm	
Image Diagonal	-	
Average Transmission	>90%	
Circular FOV	14.44°	
Back Focus Distance	14.2mm	
Back Working Distance	30.19mm	
Dimensions	Length90.2mm, Φ62mm	
Focus Type	Manual Focus	
Focus Range	-	
Mount Type	1625-36UNC-2A	
Detector Type	320*240pixels, 25μm	
Weight	-	
Environmental		
Operating Temperature	-30°C to +60°C	
Storage Temperature	-40°C to +80°C	
External Coating	AR	Anti-Reflection coating
Humidity	100%RH at 26°C and 74%RH at 35°C for 24 hours	

Drawing

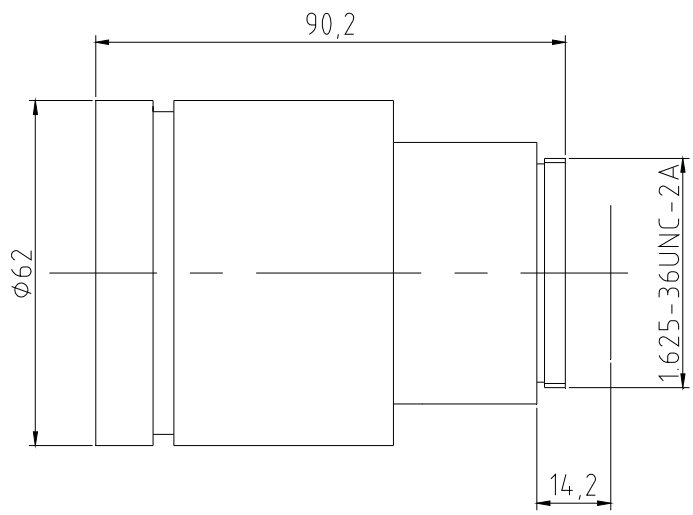

Motorized & Computerized

Wavelength offers motorized IR lens as well as computerized IR lenses. Motorized features will make operation easier and at other cases, motorized features are must for active athermal application. Our typical voltage applied on motor is 5V, 12 V subject to lens size and motor size. The motor is with reliable quality and can work under hash environment from -30 degree to +70 degree. Any lower or higher temperature will need special motor which is also available.

Computerized IR Lens has smart feature that is to move lens by software through central computer. While you are viewing IR image in the screen in the central room, you can zoom or move the lens to see more clear detail or larger field from computer or console. Our connection is RS232 or USB type. Software upgrade support is available over the time.

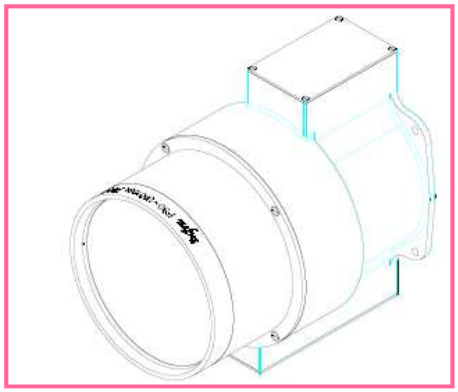

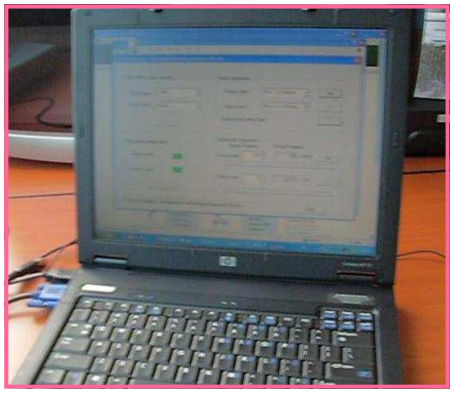

WAVELENGTH TECHNOLOGY SINGAPORE PTE LTD

Address: Blk 2, Bukit Batok Street 24,

#06-03/09, Skytech Building

Singapore 659480

Tel: 65-65649624

Fax: 65-65643862

Email: info@wavelength-tech.com

Website: www.wavelength-tech.com

ACCEPTANCE OF TERMS

Wavelength Technology accepts orders by mail, phone, fax or e-mail. All orders are subject to acceptance by Wavelength Technology. Orders must include a Purchase Order Number and specify the Wavelength Technology catalogue numbers or full details of any special requirements. Orders placed by phone must be confirmed by submission of a hard copy Purchase Order. Submission of a Purchase Order shall constitute acceptance of Wavelength Technology Terms and Conditions of Sale, set forth herein and in any Quotation provided by Wavelength Technology. **THESE TERMS AND CONDITIONS OF SALE SHALL BE THE COMPLETE AND EXCLUSIVE STATEMENT OF THE TERMS OF AGREEMENT BETWEEN BUYER AND WAVELENGTH TECHNOLOGY**.

PRICING

Catalogue prices are subject to change without notice. Custom prices are subject to change with five days' notice. Failure to object to the price change on a custom order after notice shall be deemed to be acceptance of the price change. Prices are ex work and do not include freight, duty and insurance fees or any other tax. Prices quoted are valid for 30 days, unless quoted otherwise.

TERMS OF PAYMENT

Singapore: Except as otherwise specified, all payments are due and payable within 30 days from the invoice date. Wavelength Technology will accept payment by C.O.D, cheque or an account established with Wavelength Technology.

International Orders: Orders for delivery to Buyers outside Singapore must be fully prepaid by wire transfer, cheque or by irrevocable letter of credit issued by bank. Payments must include all associated costs. Letter of credit must be valid for 90 days.

* All information provided in this catalogue is for product overview. Wavelength Technology Singapore reserves the right to make any amendment on parameters and details without prior notice in the course of product improvement.