IR Reflecting Mirror

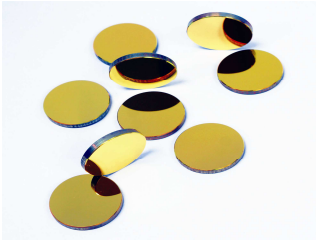

Total Reflectors are used either within a laser cavity as rear mirrors or folding mirrors, or external to the laser as bending mirrors to deliver the beam to the work.

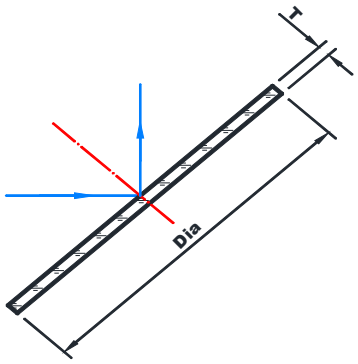

Specifications	
Diameter Tolerance	+0,-0.13mm
Thickness Tolerance	±0.25mm
Clear Aperture	>80%
Surface Flatness	λ/4@632.8nm
Parallelism	< 3 arc minutes
Surface Quality	40/20 scratch and dig
AOI	45 degree

Part No.	Dia (mm)	Thk (mm)	Material	Wavelength
RSI-12-1.5	12.0	1.5	Silicon	HR@10.6μm
RSI-15-4	15.0	4.0	Silicon	HR@10.6μm
RSI-19-3E	19.0	3.0	Silicon	HR@10.6μm
RSI-0.75-3	19.1	3.0	Silicon	HR@10.6μm
RSI-1-3	25.4	3.0	Silicon	HR@10.6μm
RSI-1-3DBR	25.4	3.0	Silicon	HR@10.6μm/650nm
RSI-1.1-3	27.9	3.0	Silicon	HR@10.6μm
RSI-1.5-4	38.1	4.0	Silicon	HR@10.6μm
RSI-1.5-9.6	38.1	9.7	Silicon	HR@10.6μm
RSI-2-5	50.8	5.1	Silicon	HR@10.6μm
RSI-2-9.5	50.8	9.5	Silicon	HR@10.6μm
RMO-0.75-3	19.0	3.0	Molybdenum	HR@10.6μm
RMO-1-3	25.4	3.0	Molybdenum	HR@10.6μm

NOTE: Mirror of different sizes and materials are available upon request.

Si/Cu Phase Reflector/Mirror

Reflective Phase Retarders are used as beam bending mirrors external to the laser cavity to establish and maintain circular polarization. This requirement is particularly vital for laser material processing applications where cut or scribed edge quality, or weld penetration, is critical to the consistency and precision of the final part. Zero degree Phase Retarder maintain control over the circularly polarized beam.

Part No.	Dia (mm)	Thk (mm)	Type
0RSI-25-3	25.0	3.0	Si Zero Phase Retarder
0RSI-1-3	25.4	3.0	Si Zero Phase Reflector
0RCU-38-10	38.0	10.0	Cu Zero Phase Retarder
0RSI-1.5-4	38.1	4.0	Si Zero Phase Reflector
0RSI-1.5-5	38.1	5.0	Si Zero Phase Reflector
0RSI-2-5	50.8	5.0	Si Zero Phase Reflector
0RSI-2-9.5	50.8	9.5	Si Zero Phase Reflector
0RCU-50-10	50.0	10.0	Cu Zero Phase Retarder
0RCU-60-10	60.0	10.0	Cu Zero Phase Retarder

NOTE: Mirror of different sizes and materials are available upon request.

ZnSe Protective Window

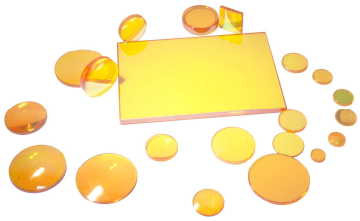

ZnSe is commonly used in thermal resistance application.
ZnSe has wide usage in high power CO2 laser systems.

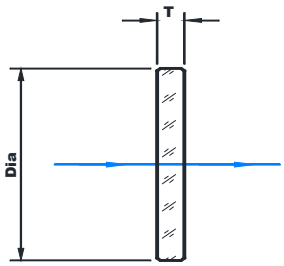

Specifications	
Diameter Tolerance	+0.0, -0.13 mm
Thickness Tolerance	±0.25mm
Clear Aperture	>80%
Parallelism	<3 arc minutes
Surface Flatness	λ /4 per 1"Dia @632.8nm
Surface Quality	40-20 scratch and dig

WZ Series

Part No.	Dia (mm)	Thk (mm)	Material	Wavelength
WZ-0.5-2	12.7	2.0	ZnSe	10.6μm
WZ-18-2	18.0	2.0	ZnSe	10.6μm
WZ-0.75-3	19.1	3.0	ZnSe	10.6μm
WZ-1-3	25.4	3.0	ZnSe	10.6μm
WZ-1.1-3	27.9	3.0	ZnSe	10.6μm
WZ-30-1.5	30.0	1.5	ZnSe	10.6μm
WZ-1.5-3	38.1	3.0	ZnSe	10.6μm
WZ-50-3	50.0	3.0	ZnSe	10.6μm
WZ-50-4	50.0	4.0	ZnSe	10.6μm
WZ-2-5	50.8	5.0	ZnSe	10.6μm