WAVELENGTH
OPTO-ELECTRONIC

RONAR-SMITH®

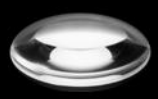

Wavelength Opto-Electronic (S) Pte Ltd started its business in 2002 with the sole emphasis on photonics. Over the years, we design, develop and manufacture multi-element and component lenses in Singapore for industries that require stringent laser and infrared optical solutions. At present, our facility is equipped to conduct research & development work and provide precision assembly & QC testing capabilities. To date, we have more than 40 employees in Singapore and our regional offices.

We strive to grow and expand our range of lasers and infrared products to address growing complex applications from the semiconductor, life sciences, medical, security & surveillance, research & development and inspection market. With our knowledge in processing and handling sensitive crystal materials, we take pride in providing top notch optical products and supplying optical components to our customers globally.

Besides Singapore, Wavelength Opto-Electronic (S) export products and provide services to customers in the US, Europe and Asia market. We have direct sales presence in the US, Germany, Korea, Thailand, Taiwan and China with our 6 sales offices worldwide.

In 2004, we established a 12,500m2 factory in Nanjing, China for design and production of precision optics to support our global business and supply demands. At present, we are expanding our factory manufacturing facilities to address our business growth and reduce manufacturing capacity bottlenecks. A modern optics prototyping facility expansion in Singapore is also underway and slated for completion by 2019, which will propel Wavelength Opto-Electronic Singapore as a truly integrated manufacturer in the South-East Asia region.

Our Vision: To be Major Player in Global Opto-Electronic Industry

Our Mission: To Broaden Wavelength

Our Core Value: Innovation, Teamwork, Excellence, Customer-focus (ITEC)

"We do not believe in perfection. What is perfect today may not be tomorrow. Only through constant innovation and reinvention can we strive towards excellence "

Robert Huang, CEO

Manufacturing Capability of WOE

Manufacturing Capability	
Glass Material	BK7, Fused Silica, Glass Material from CDGM, Schott, Ohara, and etc.
Crystal Material	ZnSe, ZnS , Ge, GaAs, CaF2, BaF2, Si, Cu, Mo, Sapphire, Chalcogenide, and etc.
Diameter Range	5-250mm
Type of Lens Shapes	Plano, Spheric, Aspheric, Cylindrical, Parabolic, Axicon, Prism, Freeform, and etc.
Type of Coatings	AR, HR, PR, BC, BS, DLC, Filter
Quality Management System	ISO9001 and ISO14000 Certified
Customization	Optical Design / Mechanical Design / Opto-Electronic Solution
Coating wavelength	193nm – 14um
Best Tolerance	Diameter:+0/-0.02 , Center thickness:±0.02mm , Surface:20/10 Fringe < 1/0.5, PV0.2(aspheric) Decentering <=40"

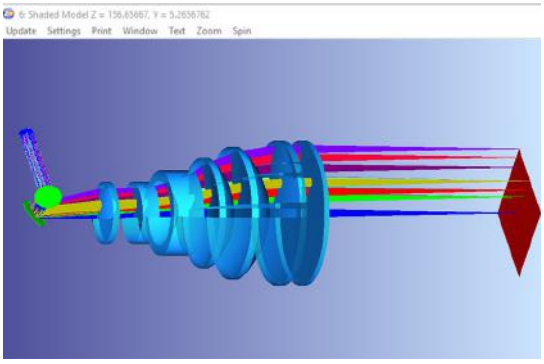

Optical Design

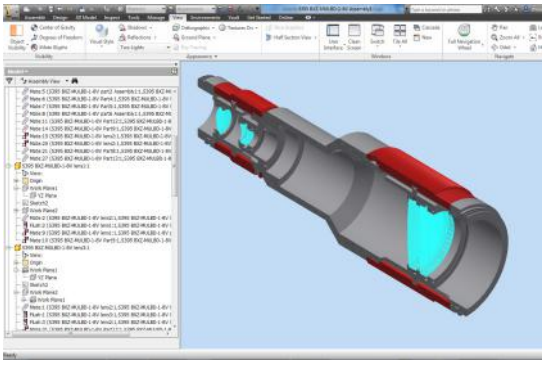

Opto-mechanical Design

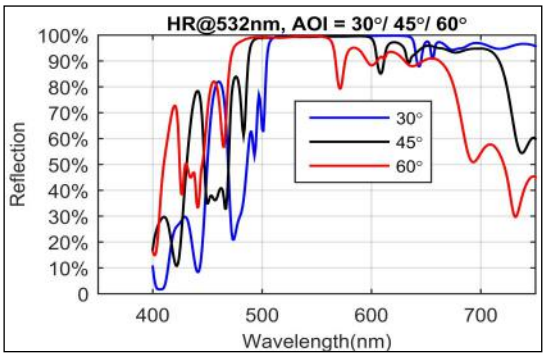

HR Coating @ 1064nm

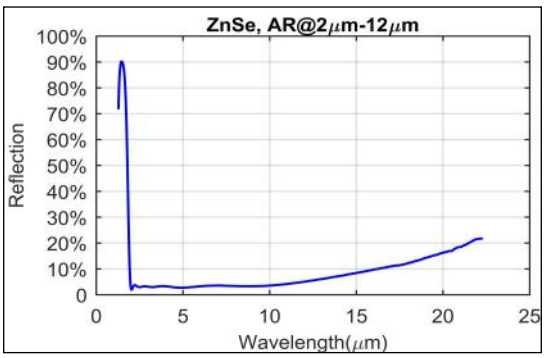

BBAR @ 2-12μm

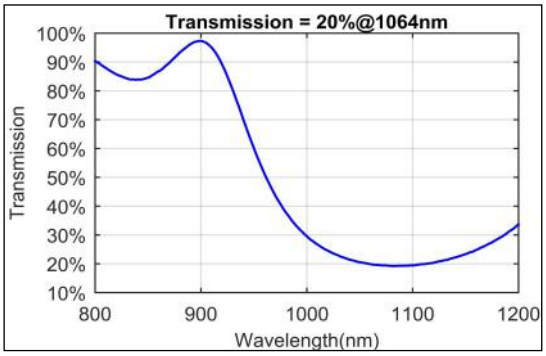

Partial Reflector, T = 20% @1064nm

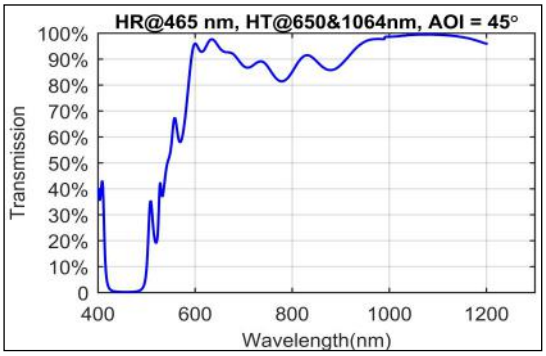

Beam Combiner

Production Equipment

Lens Polisher

OptoTech Aspheric Generator

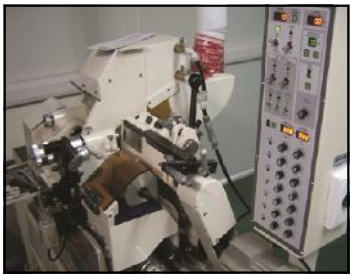

Edging Generator

5-axis Diamond Turning Machine

SPS Machine

Coating Machine

Quality Control Equipment

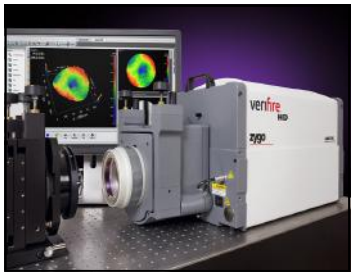

Horizontal Zygo Interferometer

Spectrophotometer

Profiler – Mitutoyo

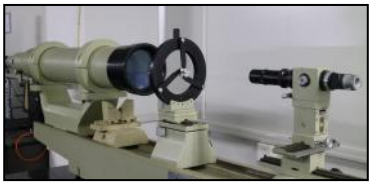

Optical Bench

Center Deviation Tester - Trioptics

MTF Inspection Equipment

RONAR-SMITH® LASER OPTICS — UV - VIS - NIR

RONAR-SMITH® LASER OPTICS — CO_2

RONAR-SMITH® MEDICAL GRADE LASER OPTICS

RONAR-SMITH® BEAM DELIVERY OPTICS

RONAR-SMITH® LASER OPTICS ACCESSORIES

APPENDIX

RONAR-SMITH® LASER OPTICS — UV - VIS - NIR

- Telecentric Scan Lens
- F-theta Scan Lens
- Beam Expanders
- Air-spaced Focusing Lens
- Achromatic Cemented Focusing Lens
- Aspheric Lens
- Focusing Lens
- Reflective Mirror
- Scanning Mirror
- Protective Windows
- Beam Combiner
- Beam Splitter
- Cube Beam Splitter
- Cavity Optics

Telecentric F-Theta Scan Lens By Fused Silica

Telecentric F-Theta Scan lens is a special type of lens system whereby the deflected off-axial laser beam can be perpendicularly focused to work piece as similar to the on-axial focusing beam. The advantage of the telecentric scan lens is that it is able to flatten the field curvature to the least distortion and yet offering superb spot quality throughout the scan field. For high powered laser and ultrafast laser source, we offer TSL-Q Series Telecentric F-Theta Scan Lens to minimize thermal lensing and focal shift.

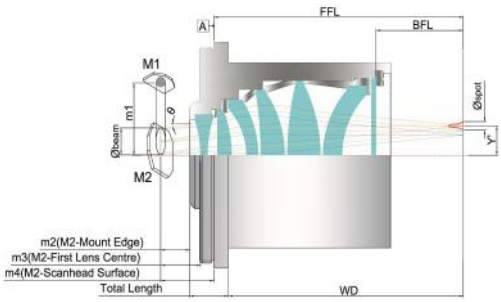

Features

As the beam falls on the mirror and deflected by the mirror, the scan length is directly proportional to the scan angle.
Focus position over the entire scan area should be in the same plane.
The scan length can be calculated by using the formula:

2Y'=EFL*2θ*π/180

2Y': Scan length (mm)= $\sqrt{2}$ x scan field, EFL: Effective focal length (mm), 2θ: scan angle (°),
π /180: Conversion factor from degrees to radians.

Focus spot diameter = 1.83*M²*λ*EFL/D

The focus spot diameter refers to the intensity ($1/e^2$) at Gaussian illumination.
1.83: Factor of Apodisation, λ: Wavelength (um), EFL: Focal length (mm), D: Input beam diameter (mm), Assume M² =1 : Beam quality.

* Focus Spot Size for reference only
* Max. Scan Angle: Diagonal optical scan angle
* Lens adaptors for major scan head providers are available upon request.

1900-2000nm

Part No.	EFL (mm)	Scan Field (mm)	Input Beam Φ ($1/e^2$) (mm)	Thread	WD (mm)	Window Dia×Thk (mm)
TSL-2000-20-58Q	58.0	20x20	10.0	M85x1	79.0	—
TSL-2000-60-105Q	105.0	60x60	10.0	M85x1	139.0	—
TSL-2000-90-170Q	170.0	90x90	15.0	M85x1	210.0	—

1550nm

Part No.	EFL (mm)	Scan Field (mm)	Input Beam Φ ($1/e^2$) (mm)	Thread	WD (mm)	Window Dia×Thk (mm)
TSL-1550-10-55Q	55.0	10x10	10.0	M44x1	51.3	40×2
TSL-1550-20-55Q	55.0	20x20	10.0	M85x1	70.7	53×2
TSL-1550-15-80Q	80.0	15x15	12.0	M85x1	91.9	40×2
TSL-1550-80-195Q	195.0	80x80	15.0	M85x1	271.6	134×3

1030-1090nm

Part No.	EFL (mm)	Scan Field (mm)	Input Beam Φ ($1/e^2$) (mm)	Thread	WD (mm)	Window Dia×Thk (mm)
TSL-1064-10-56Q-D20	56.0	10x10	20.0	M55x1	23.8	40x4
TSL-1064-20-82Q	82.0	20x20	15.0	M85x1	85.0	62x3
TSL-1064-50-100Q	100.0	50x50	10.0	M85x1	131.0	128x3
TSL-1064-70-150Q-D20	150.0	70x70	20.0	M85x1	199.8	128x2.5
TSL-1064-90-163Q	163.0	90x90	15.0	M85x1	201.0	94×2.5
TSL-1064-85-167Q-D20	167.0	85x85	20.0	M85x1	226.3	137x2.5
TSL-1064-100-170Q	170.0	100x100	10.0	M85x1	224.0	131x3.5
TSL-1064-80-180Q	180.0	80x80	10.0	M85x1	259.4	118x3
TSL-1064-130-290Q-20	290.0	130x130	20.0	M85x1	399.8	188x5
TSL-1064-150-420Q	420.0	150x150	14.0	M85x1	636.4	130x3

900-1080nm

Part No.	EFL (mm)	Scan Field (mm)	Input Beam Φ (1/e^2) (mm)	Thread	WD (mm)	Window Dia×Thk (mm)
TSL-980-90-163Q	163.0	90x90	15.0	M85x1	200.0	115x2.5

515-545nm

Part No.	EFL (mm)	Scan Field (mm)	Input Beam Φ (1/e^2) (mm)	Thread	WD (mm)	Window Dia×Thk (mm)
TSL-532-10-56Q-D20	56.0	10x10	20.0	M55x1	22.0	40x4
TSL-532-30-80Q	80.0	30x30	12.0	M55x1	80.6	72x3
TSL-532-40-100Q	100.0	40x40	10.0	M85x1	136.2	74x2.5
TSL-532-65-163Q	163.0	65x65	12.0	M85x1	195.0	114x2.5
TSL-532-90-163Q	163.0	90x90	10.0	M85x1	218.8	106x3

405nm

Part No.	EFL (mm)	Scan Field (mm)	Input Beam Φ (1/e^2) (mm)	Thread	WD (mm)	Window Dia×Thk (mm)
TSL-405-29-55Q	55.0	29x29	6.0	M55x1	59.5	60x2

343-355nm

Part No.	EFL (mm)	Scan Field (mm)	Input Beam Φ (1/e^2) (mm)	Thread	WD (mm)	Window Dia×Thk (mm)
TSL-355-8-32Q	32.0	8x8	10.0	M39x1	16.3	32x1.5
TSL-355-20-50Q	50.0	20x20	5.0	M55x1	28.1	48x2
TSL-355-35-80Q	80.0	35x35	6.0	M55x1	104.4	66×2
TSL-355-35-100Q	100.0	35x35	10.0	M85x1	131.9	76×2
TSL-355-50-103Q	103.0	50x50	9.0	M85x1	137.4	80×2
TSL-355-63-109Q	109.0	63x63	6.0	M85x1	151.4	115×2.5
TSL-355-100-160Q	160.0	100x100	14.0	M85x1	237.8	176x5
TSL-355-65-163Q	163.0	65x65	10.0	M85x1	194.0	114x2
TSL-355-90-163Q	163.0	90x90	10.0	M85x1	222.0	114x2
TSL-355-60-167Q	167.0	60x60	10.0	M85x1	222.6	100×2
TSL-355-100-170Q	170.0	100x100	10.0	M85x1	238.1	128x3.5
TSL-355-86-254Q	254.0	86x86	6.0	M85x1	147.1	136×3
TSL-355-175-254Q	254.0	175x175	12.0	M79x1/M85x1	304.9	92x3
TSL-355-160-260Q-D10	260.0	160x160	10.0	M85x1	371.0	183x5
TSL-355-130-290Q	290.0	130x130	10.0	M85x1	484.0	200x3
TSL-355-100-294Q-D30	294.0	100x100	30.0	M85x1	392.5	164x5
TSL-355-180-300-D10	300.0	180x180	10.0	M85X1	402.1	236x5
TSL-355-160-360Q	360.0	160x160	10.0	M150x1	440.1	252×5
TSL-355-200-367Q-D20	367.4	200x200	20.0	6-ø6.6	494.9	260x5
TSL-355-200-370Q	370.0	200x200	14.0	M85x1	536.9	325x5
TSL-355-230-390Q-D20	390.0	230x230	20.0	M85x1	539.5	311x5
TSL-355-300-420Q	420.0	300x300	14.0	M85x1	559.9	354x10

248-257-266nm

Part No.	EFL (mm)	Scan Field (mm)	Input Beam Φ (1/e^2) (mm)	Thread	WD (mm)	Window Dia×Thk (mm)
TSL-257-12-50Q	50.0	12x12	10.0	M44x1	27.7	32×2
TSL-266-20-55Q	55.0	20x20	6.0	M44x1	51.2	42×2
TSL-248-40-100Q	100.0	40x40	10.0	M60x1	131.8	76×2
TSL-257-45-100Q	100.0	45x45	10.0	M66x1	126.3	84×2
TSL-266-50-100Q	100.0	50x50	5.0	M85x1	135.6	106x2
TSL-257-80-150Q	150.0	80x80	10.0	M55x1	215.4	170x3

Telecentric F-Theta Scan Lens By Optical Glass

1064nm

Part No.	EFL (mm)	Scan Field (mm)	Input Beam Φ ($1/e^2$) (mm)	Thread	WD (mm)	Window Dia×Thk (mm)
TSL-1064-18-56	56.0	18x18	10.0	M39x1	59.8	40×2
TSL-1064-40-80-D25	80.0	31x31	25.0	M85x1	78.8	98x2.5
TSL-1064-40-100-D25	100.0	37x37	25.0	M85x1	70.1	110x2
TSL-1064-60-107	107.0	60x60	10.0	M79x1	135.6	103x3
TSL-1064-66-125	125.0	66x66	15.0	M85x1	148.7	84x2.5
TSL-1064-73-163	163.0	73x73	15.0	M85x1	214.1	126×3
TSL-1064-90-190	190.0	90x90	18.0	M85x1	166.4	-
TSL-1064-126-216	216.0	126x126	15.0	TK253	343.3	210×3
TSL-1064-140-220	220.0	140x140	16.0	M100x1	289.9	228×4

980nm

Part No.	EFL (mm)	Scan Field (mm)	Input Beam Φ ($1/e^2$) (mm)	Thread	WD (mm)	Window Dia×Thk (mm)
TSL-980-50-110	110.0	50x50	25.0	M85x1	102.5	108x3
TSL-980-65-133	133.0	65x65	10.0	M85x1	178.1	108x3
TSL-980-110-170-D30	170.0	110x110	30.0	M85x1	135.0	156x4
TSL-980-130-190-D30	190.0	130x130	30.0	M120x1	206.24	248x10

633nm

Part No.	EFL (mm)	Scan Field (mm)	Input Beam Φ ($1/e^2$) (mm)	Thread	WD (mm)	Window Dia×Thk (mm)
TSL-633-30-100	100.0	30x30	10.0	M85x1	99.1	62×2
TSL-633-75-160	160.0	75x75	10.0	M85x1	212.0	128×2.5

532nm

Part No.	EFL (mm)	Scan Field (mm)	Input Beam Φ ($1/e^2$) (mm)	Thread	WD (mm)	Window Dia×Thk (mm)
TSL-532-5-25	25.0	5x5	10.0	M39x1	7.1	28x1
TSL-532-15-58	58.0	15x15	10.0	M55x1	55.1	42×2
TSL-532-36-100	100.0	36x36	16.0	M85x1	114.7	86×2.5
TSL-532-53-100	100.0	53x53	15.0	M85x1	127.4	84×3
TSL-532-70-100	100.0	70x70	14.0	M85x1	93.0	114×3
TSL-532-66-102	102.0	66x66	15.0	M85x1	97.2	112x4
TSL-532-60-105	105.0	60x60	10.0	M85x1	129.1	108×2.5
TSL-532-75-163	163.0	75x75	10.0	M85x1	167.2	123×2.5
TSL-532-140-200N	200.0	140x140	10.0	M85x1	268.5	222×4.5

TSL — Achromatic Telecentric Scan Lens

When a vision system is being integrated into laser machining system, our achromatic telecentic scan lenses are colour-corrected between working wavelength and vision wavelength. The achromatic telecentric scan lens offers the benefits as same as the normal telecentic lens yet able to provide accurate vision positioning function. It is very useful for online inspection systems where the operator does not need to have offline inspection on the work piece.

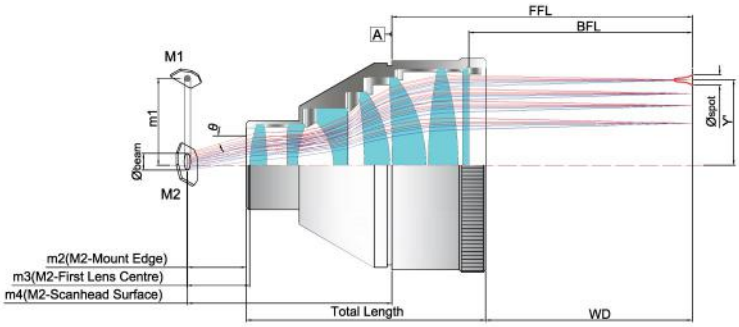

Part No.	EFL (mm)	Scan Field (mm)	Input Beam Φ (1/e^2) (mm)	Thread	WD (mm)	Wavelength	Window Dia×Thk (mm)
TSL-1064-635-200-360	360.0	200x200	30.0	M85x1	358.4	1064/635nm	154×3
TSL-1064-660-60-163	163.0	60x60	15.0	M85x1	108.9	1064/660nm	106×3
TSL-1064-532-60-110	110.0	60x60	10.0	M85x1	56.7	1064/532nm	100x3
TSL-808-635-70-163	163.0	70x70	14.0	M92x1	99.6	808/635nm	122×3
TSL-532-635-50-120	120.0	50x50	15.0	—	52.0	532/635nm	120×2
TSL-532-635-60-150	150.0	60x60	15.0	—	79.5	532/635nm	120×2
TSL-355-635-50-120	120.0	50x50	6.0	M85x1	85.4	355/635nm	80×2

F-Theta Scan Lens made by Fused Silica

SL-Q Series F-Theta Scan Lenses are developed for ultra fast lasers with short pulse width and high pulse energy laser applications. These lenses are made with low dispersion Fused Silica with optical design to avoid back reflection and ghost image.

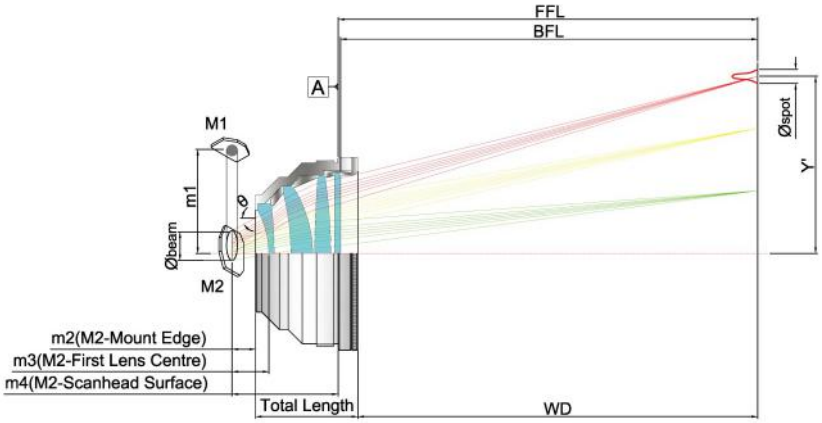

1900-2000nm

Part No.	EFL (mm)	Scan Field (mm)	Input Beam Φ (1/e^2) (mm)	Thread	WD (mm)	Window Dia×Thk (mm)
SL-2000-100-160Q	160.0	100x100	10.0	M55x1	179.6	64×2
SL-2000-175-254Q	254.0	175x175	10.0	M55x1	281.7	90×3.5

1030-1090nm

Part No.	EFL (mm)	Scan Field (mm)	Input Beam Φ (1/e^2) (mm)	Thread	WD (mm)	Window Dia×Thk (mm)
SL-1064-50-100Q	100.0	50x50	15.0	M85x1	131.0	94×2.5
SL-1064-70-100Q	100.0	70x70	10.0	M85x1	123.4	120x3
SL-1064-94-163Q	163.0	94x94	20.0	M85x1	204.8	138×2.5
SL-1064-112-163Q	163.0	112x112	10.0	M85x1	203.7	120×2.5
SL-1064-170-255Q-D20	255.0	170x170	20.0	M85x1	319.4	150x3
SL-1064-142-277Q	277.0	142x142	15.0	M85x1	347.5	96×2.5
SL-1064-215-340Q-D20	340.0	215x215	20.0	M85x1	203.8	140×3.5
SL-1064-280-420Q	420.0	280x280	14.0	M85x1	506.3	112×2.5
SL-1064-320-450Q	450.0	320x320	14.0	M85x1	515.9	104×3.0
SL-1064-200-460Q-D30	460.0	200X200	30.0	M98x1	572.8	144x4
SL-1064-280-500Q-D30	500.0	280x280	30.0	M85x1	618.3	180×3.5
SL-1064-340-500Q-D20	500.0	340x340	20.0	M85x1	569.8	140x3.5
SL-1064-350-640Q	640.0	350x350	10.0	M85x1	706.9	73x2.5
SL-1064-425-875Q-D20	875.0	425x425	20.0	M85x1	975.2	83x2.5

900-1080nm

Part No.	EFL (mm)	Scan Field (mm)	Input Beam Φ (1/e^2) (mm)	Thread	WD (mm)	Window Dia×Thk (mm)
SL-980-160-260Q-D20	260.0	160x160	20.0	M85x1	130.0	138x3.5
SL-980-215-335Q-D20	335.0	215x215	20.0	M85x1	200.0	140x3.5
SL-980-280-420Q	418.5	280x280	14.0	M85x1	497.3	112x2.5
SL-980-400-640Q-D20	640.0	400x400	20.0	M85x1	556.0	128x3.5
SL-980-450-650Q-D30	650.0	450x450	30.0	M123x1	784.9	220x5

515-545nm

Part No.	EFL (mm)	Scan Field (mm)	Input Beam Φ (1/e^2) (mm)	Thread	WD (mm)	Window Dia×Thk (mm)
SL-532-74-113Q	113.0	74x74	6.0	M85x1	140.5	84×2.0
SL-532-90-163Q	163.0	90x90	10.0	M85x1	204.6	96×3.0
SL-532-115-165Q	165.0	115x115	10.0	M85x1	220.7	119×2.5
SL-532-165-260Q	260.0	165x165	10.0	M85x1	338.4	120x3.5
SL-532-205-330Q	330.0	205x205	14.0	M85x1	389.5	100x2.5
SL-532-365-615Q	615.0	367x367	10.0	M85x1	706.9	73x2.5
SL-532-500-815Q	815.0	500x500	10.0	M85x1	936.7	96x3

405nm

Part No.	EFL (mm)	Scan Field (mm)	Input Beam Φ (1/e^2) (mm)	Thread	WD (mm)	Window Dia×Thk (mm)
SL-405-110-175Q	175.0	110x110	6.0	M55x1	209.4	56×2
SL-405-140-210Q	210.0	140x140	10.0	M55x1	162.8	83x2.5
SL-405-160-210Q	210.0	160x160	7.0	M55x1	264.5	104x3
SL-405-163-263Q	263.0	163x163	10.0	M85x1	321.9	96x3
SL-405-330-511Q	511.0	330x330	14.0	M79x1	594.6	100x2.5
SL-405-320-570Q	570.0	327x327	10.0	M85x1	687.9	96×3
SL-405-380-650Q	650.0	380x380	17.0	M85x1	738.1	72×2

343-355nm

Part No.	EFL (mm)	Scan Field (mm)	Input Beam Φ (1/e^2) (mm)	Thread	WD (mm)	Window Dia×Thk (mm)
SL-355-60-100Q	100.0	60x60	6.0	M85x1	136.9	78x3
SL-355-76-108Q	108.0	76x76	6.0	M85x1	137.0	82x2
SL-355-100-160Q	160.0	100x100	10.0	M95x2	137.6	70x3
SL-355-60-110Q	110.0	60x60	6.0	M85x1	137.4	63×2
SL-355-85-160Q	160.0	85x85	10.0	M85x1	216.2	115x3
SL-355-100-160Q	160.0	100x100	7.0	M85x1	197.4	68x2
SL-355-105-170Q	170.0	105x105	6.0	M85x1	216.1	76×2
SL-355-155-250Q	250.0	155x155	10.0	M85x1	299.8	82×2
SL-355-168-255Q	255.0	168x168	10.0	M85x1	322.4	120x3
SL-355-180-295Q	295.0	180x180	10.0	M85x1	359.6	80×2
SL-355-210-330Q	330.0	210x210	14.0	M85x1	265.1	114x4
SL-355-330-511Q	511.0	330x330	14.0	M85x1	606.0	106x3
SL-355-350-580Q	580.0	350x350	10.0	M85x1	682.8	100×3
SL-355-500-815Q	815.0	500x500	10.0	M85x1	976.4	107×3
SL-355-440-830Q	830.0	440x440	14.0	M85x1	979.1	86x2
SL-355-470-920Q	919.9	470x470	14.0	M85x1	1035.1	76x2

266nm

Part No.	EFL (mm)	Scan Field (mm)	Input Beam Φ (1/e^2) (mm)	Thread	WD (mm)	Window Dia×Thk (mm)
SL-266-70-100Q	100.0	70x70	5.0	M85x1	132.0	84x2
SL-266-100-160Q	162.3	100x100	5.0	M85x1	198.8	62×2
SL-266-150-250Q	250.0	150x150	4.0	M55x1	298.4	60x2

F-Theta Scan Lens by Optical Glass

F-Theta lenses are commonly used in galvanometer scanning systems for laser marking, engraving and cutting; with the ability to deliver a focused spot to many points within a scanning field. We also supply lens adaptors for major scan head providers in the world.

1550nm

Part No.	EFL (mm)	Scan Field (mm)	Input Beam Φ ($1/e^2$) (mm)	Thread	WD (mm)	Window Dia×Thk (mm)
SL-1550-100-160	160.0	100x100	9.0	M85x1	175.6	68×3
SL-1550-240-420	420.0	240x240	10.0	M85x1	504.3	82×3

1064nm

Part No.	EFL (mm)	Scan Field (mm)	Input Beam Φ ($1/e^2$) (mm)	Thread	WD (mm)	Window Dia×Thk (mm)
SL-1064-45-80	80.0	45x45	10.0	M55x1	91.35	47×2
SL-1064-70-100	100.0	70x70	14.0	M85x1	98.8	76×3
SL-1064-80-125	125.0	80x80	15.0	M85x1	152.6	106x3
SL-1064-70-160-D30	160.0	70x70	30.0	M100x1	172.3	116×3
SL-1064-100-160-D20	160.0	100x100	20.0	M85x1	187.9	102x3
SL-1064-100-160A	160.0	104x104	10.0	M85x1	181.4	72x3
SL-1064-110-F160B	160.0	110x110	12.0	M85x1	183.0	75x1.6
SL-1064-107-163	163.0	107x107	12.0	M85x1	180.8	75x2
SL-1064-112-163	163.0	112x112	10.0	M85x1	184.9	76×3
SL-1064-100-165-D25	165.0	100x100	25.0	M85x1	197.1	126×3
SL-1064-120-170	170.0	120x120	14.0	M85x1	195.8	110x2.7
SL-1064-140-210	210.0	140x140	14.0	M85x1	238.4	86×2.5
SL-1064-160-210	210.0	160x160	10.0	M85x1	246.2	94x2.5
SL-1064-100-254-D30	254.0	100x100	30.0	M85x1	303.3	110×2.5
SL-1064-175-F254B	254.0	175x175	10.0	M85x1	280.0	75×2
SL-1064-175-254	254.0	175x175	16.0	M85x1	288.9	97×2.5
SL-1064-180-254	254.0	180x180	20.0	M85x1	295.0	120×3
SL-1064-180-260	260.0	180x180	10.0	M85x1	304.7	97×2.5
SL-1064-200-310-D25	310.0	200x200	25.0	M85x1	352.3	116×3
SL-1064-205-330	330.0	205x205	14.0	M85x1	385.0	98×2.5
SL-1064-305-338	338.0	305x305	15.0	M85x1	362.78	128×2
SL-1064-300-420	419.8	300x300	14.0	M85x1	492.0	110×2.5
SL-1064-320-420-D30	420.0	320x320	30.0	M85x1	391.8	204×4
SL-1064-365-500	500.0	356×356	14.0	M95×2	543.42	100×3.5
SL-1064-400-525	525.0	400x400	10.0	M85×1	597.2	88x2.5
SL-1064-330-580	580.0	330×330	10.0	M85×1	709.53	83×3
SL-1064-500-815	815.0	500x500	24.0	M85x1	962.0	150×3

808-980nm

Part No.	EFL (mm)	Scan Field (mm)	Input Beam Φ (1/e^2) (mm)	Thread	WD (mm)	Window Dia×Thk (mm)
SL-980-53-98	98.0	53x53	10.0	M85x1	114.8	68×2
SL-980-70-100	100.0	70x70	14.0	M85x1	98.0	76x3
SL-980-109-160	160.0	109x109	12.0	M85x1	186.1	64x2
SL-980-103-162-D20	162.0	103x103	20.0	M85x1	187.4	110x3
SL-980-107-163	163.0	107x107	12.0	M85x1	179.7	75x1.6
SL-980-90-200-D30	201.0	90x90	30.0	M85x1	241.4	125x3
SL-980-130-210-D30	210.0	130x130	30.0	M112x1	255.8	130×3
SL-980-170-250-D30	250.0	170x170	30.0	M160x1	290.0	174x3
SL-980-209-400-D20	400.0	209x209	20.0	M85x1	485.9	90×2.5
SL-980-250-410-D30	410.0	250x250	30.0	M98x1	468.0	122x3
SL-980-280-420-D20	420.0	280x280	20.0	M85x1	465.3	104x3
SL-980-340-500-D20	498.4	340x340	20.0	M85x1	568.7	140x3
SL-980-400-635-D30	635.0	400x400	30.0	M120x1	734.0	148×4
SL-980-450-812-D30	812.0	450x450	30.0	M120x1	885.5	145x3

532nm

Part No.	EFL (mm)	Scan Field (mm)	Input Beam Φ (1/e^2) (mm)	Thread	WD (mm)	Window Dia×Thk (mm)
SL-532-58-90	90.0	58x58	6.0	M85x1	96.5	42x2
SL-532-70-100	100.0	70x70	14.0	M85x1	100.9	74×2.5
SL-532-115-165	165.0	115x115	10.0	M85x1	183.5	74×2.5
SL-532-115-170	170.0	115x115	14.0	M85x1	195.4	100×3
SL-532-155-250-D20	250.0	155x155	20.0	M85x1	288.9	112x3
SL-532-150-254	254.0	150x150	10.0	M85x1	280.0	97×3
SL-532-180-254	254.0	180x180	10.0	M85x1	303.3	86×2.5
SL-532-225-410	410.0	225x225	14.0	M85x1	445.5	80×4
SL-532-297-420	420.0	297x297	15.0	M85x1	477.7	112×3
SL-532-335-520	520.0	325x325	16.0	M85x1	599.2	118×3
SL-532-500-750	750.0	500x500	16.0	M85x1	911.2	152×3

F-Theta Scan Lens for input 8mm

SLF Series F-Theta scan lenses are developed for input beam sizes less than 8mm, and they are compact with a common thread of M39x1.

1064nm

Part No.	EFL (mm)	Scan Field (mm)	Input Beam Φ (1/e^2) (mm)	Thread	WD (mm)	Window Dia×Thk (mm)
SLF-1064-63-8	63.0	36×36	8.0	M39x1	69.0	35×2
SLF-1064-80-8	80.0	52x52	8.0	M39x1	94.0	58x2
SLF-1064-100-8	100.0	60x60	8.0	M39x1	117.8	50×1.5
SLF-1064-130-8	130.0	80x80	8.0	M39x1	142.4	45x2
SLF-1064-160-8	160.0	100×100	8.0	M39x1	188.1	45×2
SLF-1064-254-8	254.0	155×155	8.0	M39x1	293.5	55×2

NOTE: Lens adaptors for major scan head providers are available upon request.

Achromatic F-Theta Scan Lens

When a vision system is being integrated into the laser machining system, our achromatic F-Theta scan lenses are colour-corrected between working wavelength and vision wavelength. They can provide accurate vision positioning function and it is very useful for online inspection systems where the operator does not need to have offline inspection on the work piece.

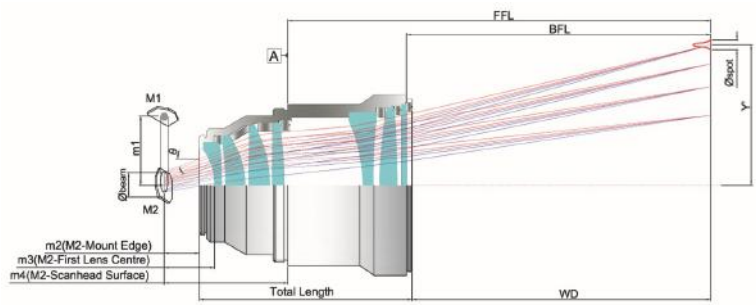

1940/635nm

Part No.	EFL (mm)	Scan Field (mm)	Input Beam Φ (1/e²) (mm)	Thread	WD (mm)	Window Dia×Thk (mm)
SL-1940-635-60-163	163.0	60x60	14.0	M85x1	128.2	68×2.5

1064/635nm

Part No.	EFL (mm)	Scan Field (mm)	Input Beam Φ (1/e²) (mm)	Thread	WD (mm)	Window Dia×Thk (mm)
SL-1064-635-100-163	163.0	100x100	12.0	M85x1	157.6	85×2
SL-1064-630-150-254	254.0	150x150	30.0	M102x1	306.9	128x4
SL-1064-635-180-260	260.0	180x180	15.0	M85x1	261.4	123×3

1064/532nm

Part No.	EFL (mm)	Scan Field (mm)	Input Beam Φ (1/e²) (mm)	Thread	WD (mm)	Window Dia×Thk (mm)
SL-1064-532-25-60	60.0	25x25	6.0	M79/42x1	42.1	42x2
SL-1064-532-100-163	163.0	100x100	12.0	M85x1	159.7	84×2
SL-1064-532-175-254	254.0	175x175	15.0	M85x1	262.8	120×3

1030/950nm

Part No.	EFL (mm)	Scan Field (mm)	Input Beam Φ (1/e²) (mm)	Thread	WD (mm)	Window Dia×Thk (mm)
SL-1030-950-200-400	400.0	200x200	30.0	M85x1	390.2	120×3.5

355/635nm

Part No.	EFL (mm)	Scan Field (mm)	Input Beam Φ (1/e²) (mm)	Thread	WD (mm)	Window Dia×Thk (mm)
SL-355-635-90-170	170.0	90x90	10.0	M85x1	116.1	95×2.5
SL-355-635-110-220	220.0	110x110	10.0	M85x1	166.3	90×3
SL-355-635-212-328	328.0	212x212	6.0	M85x1	265.2	104×3

355/532nm

Part No.	EFL (mm)	Scan Field (mm)	Input Beam Φ (1/e²) (mm)	Thread	WD (mm)	Window Dia×Thk (mm)
SL-355-532-90-170	170.0	90x90	10.0	M85x1	125.6	95×2.5

355/405nm

Part No.	EFL (mm)	Scan Field (mm)	Input Beam Φ (1/e²) (mm)	Thread	WD (mm)	Window Dia×Thk (mm)
SL-355-405-110-178	178.0	110x110	10.0	M85x1	92.4	106×3

Beam Expanders

The most common type beam expander is derived from the Galilean telescope which usually has one negative input lens and one positive output lens. The input lens presents a virtual beam focus at the output. For low expansion ratios, the Galilean telescope is most often employed due to simplicity, small package size and low cost. Beam expanders are commonly used to magnify the laser diameter that is to be focused back in a smaller spot size.

BEX Series — Beam Expander

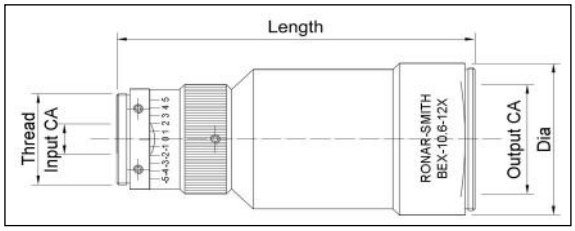

Specifications	
Magnification	1x - 50x
Beam Divergence	Adjustable
Design type	Galilean
Pointing stability	< 1 mrad

1900-2000nm Fused Silica

Part No.	Magnification	Input CA (mm)	Output CA (mm)	Thread	Max. Outer Dia (mm)	Length (mm)
BEX-2000-1.5X	1.5x	8.0	31.0	M30x1	46.0	85.0
BEX-2000-2X	2.0x	8.0	31.0	M30x1	46.0	85.0
BEX-2000-3X	3.0x	8.0	31.0	M30x1	46.0	85.0
BEX-2000-4X	4.0x	8.0	31.0	M30x1	46.0	85.0
BEX-2000-5X	5.0x	8.0	31.0	M30x1	46.0	85.0
BEX-2000-6X	6.0x	8.0	31.0	M30x1	46.0	85.0
BEX-2000-7X	7.0x	8.0	31.0	M30x1	46.0	85.0
BEX-2000-8X	8.0x	8.0	31.0	M30x1	46.0	85.0
BEX-2000-10X	10.0x	6.0	31.0	M30x1	46.0	85.0

1550nm Fused Silica

Part No.	Magnification	Input CA (mm)	Output CA (mm)	Thread	Max. Outer Dia (mm)	Length (mm)
BEX-1550-2.5X	2.5x	8.0	23.0	M22x0.75	34.0	65.2
BEX-1550-3X	3.0x	8.0	23.0	M22x0.75	34.0	70.6
BEX-1550-7X	7.0x	10.0	25.0	—	32.0	75.0
BEX-1550-8X	8.0x	10.0	30.0	M22x0.75	43.0	96.0
BEX-1550-10X	10.0x	10.0	58.0	—	65.0	98.0
BEX-1550-20X	20.0x	7.0	49.0	M22x0.75	60.0	120.0

1030-1090nm Fused Silica

Part No.	Magnification	Input CA (mm)	Output CA (mm)	Thread	Max. Outer Dia (mm)	Length (mm)
BEX-1064-1X	1.0x	15.0	18.0	M30x1	36.0	63.5
BEX-1064-1.2X	1.2x	16.0	23.0	M22x0.75	29.0	54.9
BEX-1064-1.5X	1.5x	15.5	23.0	M22x0.75	25.0	44.5
BEX-1064-1.5X-C	1.5x	12.0	24.0	C-mount	35.0	67.9
BEX-1064-2X	2.0x	10.0	20.0	M22x0.75	26.0	42.0
BEX-1064-2X-C	2.0x	12.0	24.0	C-mount	35.0	67.9
BEX-1064-2.5X	2.5x	10.0	23.0	M22x0.75	29.0	79.8
BEX-1064-2.8X	2.8x	9.0	24.0	M13x0.75	30.0	83.5
BEX-1064-3X	3.0x	10.0	23.0	M22x0.75	29.0	58.0
BEX-1064-3X-C	3.0x	12.0	24.0	C-mount	35.0	67.9
BEX-1064-4X	4.0x	10.0	22.0	M22x0.75	29.0	81.1
BEX-1064-5X	5.0x	10.0	23.0	M22x0.75	29.0	72.0
BEX-1064-6X	6.0x	5.0	22.0	M22x0.75	29.0	71.2
BEX-1064-7X	7.0x	6.0	23.0	M22x0.75	29.0	76.4

1030-1090nm Fused Silica

Part No.	Magnification	Input CA (mm)	Output CA (mm)	Thread	Max. Outer Dia (mm)	Length (mm)
BEX-1064-8X	8.0x	10.0	22.0	M22x0.75	29.0	76.0
BEX-1064-10X	10.0x	8.0	22.0	M22x0.75	29.0	69.7
BEX-1064-15X	15.0x	7.5	28.0	M30x1	45.0	99.1
BEX-1064-20X	20.0x	8.0	28.0	M22x0.75	45.0	91.2
BEX-1064-40X	40.0x	8.0	128.0	M30x1	157.0	188.7

633nm Optical Glass

Part No.	Magnification	Input CA (mm)	Output CA (mm)	Thread	Max. Outer Dia (mm)	Length (mm)
BEX-633-3X	3.0x	10.0	23.0	M22x0.75	33.0	63.7
BEX-633-5X	5.0x	8.0	23.0	M22x0.75	33.0	110.0
BEX-633-8X	8.0x	11.0	23.5	M28x0.55	35.0	117.5
BEX-633-10X	10.0x	8.0	23.0	M22x0.75	30.0	146.0
BEX-633-20X	20.0x	8.0	76.0	M22x0.75	30.0	198.0
BEX-633-40X	40.0x	8.0	100.0	M22x0.75	40.0	246.0
BEX-633-50X	50.0x	10.0	81.0	M22x0.75	30.0	304.0

515-545nm Fused Silica

Part No.	Magnification	Input CA (mm)	Output CA (mm)	Thread	Max. Outer Dia (mm)	Length (mm)
BEX-532-1X	1.0x	15.0	18.0	M30x1	36.0	63.0
BEX-532-1.5X	1.5x	10.0	23.0	M22x0.75	30.0	68.8
BEX-532-2X	2.0x	6.0	23.0	M22x0.75	30.0	83.0
BEX-532-3X	3.0x	6.0	23.0	M22x0.75	30.0	83.0
BEX-532-4X	4.0x	6.0	23.0	M22x0.75	30.0	83.0
BEX-532-5X	5.0x	8.0	24.0	M22x0.75	30.0	81.5
BEX-532-6X	6.0x	6.0	23.0	M22x0.75	30.0	83.0
BEX-532-10X	10.0x	6.0	23.0	M22x0.75	30.0	83.0
BEX-532-15X	15.0x	6.0	32.0	M30x1	30.0	85.0
BEX-532-20X	20.0x	6.0	38.0	M30x1	40.0	95.2

405nm Fused Silica

Part No.	Magnification	Input CA (mm)	Output CA (mm)	Thread	Max. Outer Dia (mm)	Length (mm)
BEX-405-1.5X	1.5x	8.0	26.0	M30×1	46.0	62.3
BEX-405-2X	2.0x	8.0	26.0	M30×1	46.0	62.3
BEX-405-3X	3.0x	8.0	18.0	M22x0.75	28.0	52.5
BEX-405-5X	5.0x	8.0	28.0	M30×1	46.0	78.0
BEX-405-7X	7.0x	8.0	26.0	M30×1	36.0	64.0
BEX-405-10X	10.0x	9.0	28.0	M30×1	46.0	85.6
BEX-405-20X	20.0x	6.0	31.0	M30×1	46.0	77.0

343-355nm Fused Silica

Part No.	Magnification	Input CA (mm)	Output CA (mm)	Thread	Max. Outer Dia (mm)	Length (mm)
BEX-355-1X	1.0x	15.0	18.0	M30×1	36.0	61.0
BEX-355-1.5X	1.5x	6.0	24.0	M30×1	46.0	76.5
BEX-355-2X	2.0x	7.0	24.0	M30×1	46.0	75.0
BEX-355-2X2	2.0x	6.0	23.0	M22x0.75	33.0	57.0
BEX-355-2.5X	2.5X	12.0	23.4	M30×1	36.0	61.0
BEX-355-3X	3.0x	6.0	24.0	M30×1	46.0	77.3
BEX-355-4X	4.0x	6.0	28.0	M30×1	46.0	75.0
BEX-355-5X	5.0x	6.0	28.0	M30×1	46.0	73.5
BEX-355-7X	7.0x	6.0	28.0	M30×1	46.0	88.1
BEX-355-8X	8.0x	6.0	28.0	M30×1	46.0	84.0
BEX-355-10X	10.0x	6.0	28.0	M30×1	46.0	96.0
BEX-355-20X	20.0x	6.0	28.0	M30×1	46.0	97.0

266nm Fused Silica

Part No.	Magnification	Input CA (mm)	Output CA (mm)	Thread	Max. Outer Dia (mm)	Length (mm)
BEX-266-1.5X	1.5x	8.0	24.0	M22×0.75	30.0	63.7
BEX-266-2X	2.0x	8.0	24.0	M22×0.75	30.0	73.0
BEX-266-3X	3.0x	6.0	30.0	M22×0.75	30.0	68.7
BEX-266-5X	5.0x	6.0	30.0	M22×0.75	30.0	69.6
BEX-266-10X	10.0x	3.0	30.0	M22×0.75	27.0	95.6
BEX-266-20X	20.0x	1.5	30.0	M22×0.75	30.0	96.0

BXZ Series — Manual Zoom Beam Expander

We provide BXZ Series Zoom Expanders with variable zoom factors, covering wavelengths from UV to the IR. 4-axis or 5-axis stages for easy adjustment and alignment are available upon request.

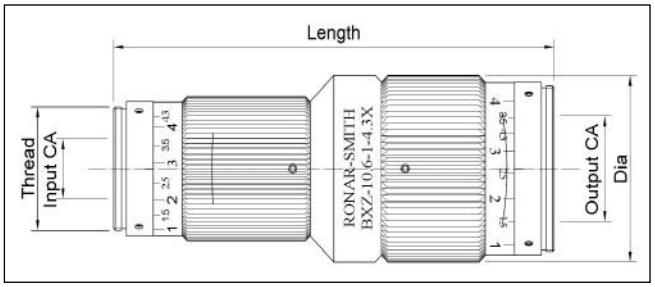

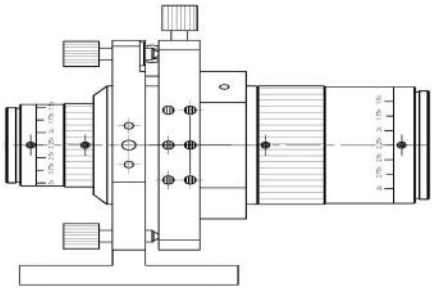

Specifications	
Magnification	Continuous Zoom
Beam Divergence	Adjustable
Pointing Stability	<1 mrad
Operational Type	Manual

BXZ Holder

1900-2000nm

Part No.	Magnification	Max. Input Beam Φ (1/e2) (mm)	Input CA (mm)	Output CA (mm)	Length (mm)	Type
BXZ-2000-1-3X	1x-3x	9@1x 6@3x	10.0	20.0	86.0	Manual

1550nm

Part No.	Magnification	Max. Input Beam Φ (1/e2) (mm)	Input CA (mm)	Output CA (mm)	Length (mm)	Type
BXZ-1550-1-4X	1x-4x	13@1x 12@4x	14.0	28.0	126.8	Manual

1030-1090nm

Part No.	Magnification	Max. Input Beam Φ (1/e2) (mm)	Input CA (mm)	Output CA (mm)	Length (mm)	Type
BXZ-1064-1-3X	1x-3x	8@1x 6@3x	14.0	28.0	117.5	Manual
BXZ-1064-1-3X-A1	1x-3x	10@1x 8@3x	20.0	38.0	131.3	Manual
BXZ-1064-1-4X	1x-4x	3@1x 2@4x	10.0	28.0	176.0	Manual
BXZ-1064-1-8X	1x-8x	6@1x 3@8x	12.0	32.0	187.5	Manual
BXZ-1064-2-8X	2x-8x	6@2x 3@8x	12.0	33.0	157.0	Manual
BXZ-1064-2-8X-A	2x-8x	8@2x 5@8x	13.0	60.0	169.0	Manual
BXZ-1064-2-10X	2x-10x	8@2x 3@10x	12.0	35.0	172.0	Manual
BXZ-1064-1-3X-G	1x-3x	9@1x 5@3x	16.0	26.0	120.0	Galilean

515-545nm

Part No.	Magnification	Max. Input Beam Φ (1/e2) (mm)	Input CA (mm)	Output CA (mm)	Length (mm)	Type
BXZ-532-1-3x	1x-3x	6@1x 5.5@3x	14.0	23.0	110.0	Manual
BXZ-532-1-4X	1x-4x	6@1x 4@4x	10.0	28.0	141.8	Manual
BXZ-532-1-8X	1x-8x	6@1x 2@8x	12.0	32.0	187.5	Manual
BXZ-532-2-6X	2x-6x	3@2x 1@6x	7.0	11.0	89.0	Manual
BXZ-532-2-8X	2x-8x	6@2x 2@8x	10.0	30.0	150.2	Manual
BXZ-532-2-10X	2x-10x	8@2x 3@10x	12.0	35.0	172.0	Manual
BXZ-532-1-3X-G	1x-3x	9@1x 5@3x	16.0	26.0	120.0	Galilean
BXZ-532-1-5X-G3	1x-5x	6@1x 3@5x	10.0	28.0	246.0	Galilean
BXZ-532-2-8X-G	2x-8x	3@2x 2@8x	7.0	36.0	242.0	Galilean

343-355nm

Part No.	Magnification	Max. Input Beam Φ (1/e2) (mm)		Input CA (mm)	Output CA (mm)	Length (mm)	Type
BXZ-355-1-3X	1x-3x	6@1x	5@3x	20.0	38.0	131.0	Manual
BXZ-355-1-4X	1x-4x	5@1x	4@4x	10.0	28.0	138.0	Manual
BXZ-355-1-8X	1x-8x	4@1x	2@8x	12.0	32.0	191.8	Manual
BXZ-355-2-8X	2x-8x	6@2x	2@8x	12.0	32.0	180.3	Manual
BXZ-355-2-8X-QA	2x-8x	6@2x	4@8x	12.0	60.0	200.8	Manual
BXZ-355-2-10X	2x-10x	8@2x	3@10x	12.0	35.0	172.0	Manual
BXZ-355-1-3X-G	1x-3x	9@1x	5@3x	16.0	26.0	120.0	Galilean
BXZ-355-2-8X-G	2x-8x	3@2x	2.5@8x	7.0	36.0	242.0	Galilean

266nm

Part No.	Magnification	Max. Input Beam Φ (1/e2) (mm)		Input CA (mm)	Output CA (mm)	Length (mm)	Type
BXZ-266-1-7X	1x-7x	5@1x	3@7x	12.0	32.0	191.8	Manual
BXZ-266-2-7X	2x-7x	5@2x	3@7x	12.0	32.0	180.3	Manual

Broadband coating is available upon request with AR/AR@750-1100nm, 425-700nm, 255-410nm.

BXZ-MOT Series—Motorized Zoom Beam Expander

Motorized Zoom Beam Expanders can be used to expand or contract the laser beam. The lens group will move automatically to their calculated positions by electronic and software control. They have short set-up time and allow quick and precise change of laser beam parameters in on-going production. They also have high pointing stability. Suitable mounting stages for easy holding and adjustment are available.

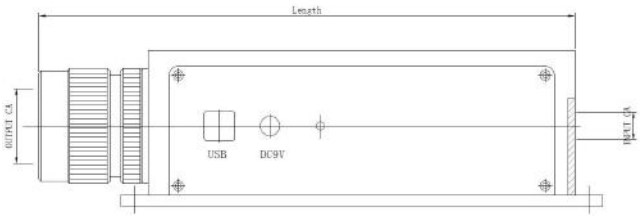

Specifications	
Fast Adjustment between Each Magnification	5 sec
Baud Rate	9600 bit/sec
Power Input	9V
Interface	RS232 and USB
Pointing Stability	<1 mrad

Part No.	Magnification	Max. Input Beam Φ (1/e2) (mm)		Input CA (mm)	Output CA (mm)	Length (mm)	Type	Wavelength(nm)
BXZ-1550-1-4X-MOT	1x-4x	13@1x	12@4x	14.0	28.0	277.0	Motorized	1550
BXZ-1550-0.5-5X-MOT	0.5x-5x	4@0.5x	2@5x	6.0	40.0	225.9	Motorized	1550
BXZ-1064-1-3X-MOT	1x-3x	8@1x	6@3x	10.0	28.0	179.2	Motorized	1064
BXZ-1064-1-8X-MOT	1x-8x	6@1x	3@8x	12.0	32.0	159.0	Motorized	1064
BXZ-532-1-4X-G-MOT	1x-4x	5@1x	2@4x	10.0	18.0	168.0	Motorized	532
BXZ-532-1-8x-MOT	1x-8x	6@1x	2@8x	10.0	32.0	159.0	Motorized	532
BXZ-355-1-8X-MOT	1x-8x	4@1x	2@8x	10.0	32.0	136.0	Motorized	355
BXZ-266-1-7X-MOT	1x-7x	5@1x	3@7x	10.0	32.0	136.0	Motorized	266

Air Spaced Series — Focusing Lens

The purpose of developing Air-Spaced focusing lenses is to minimize aberration and achieve a smallest spot size. The achromatic triplet focusing lenses are color corrected; both working laser beam and inspection visible beam will focus on a same focus point or two closest ones.

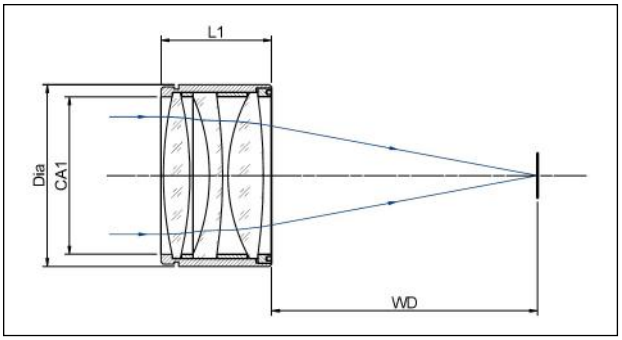

Part No.	EFL (mm)	Dia (mm)	CA1 (mm)	L1 (mm)	WD (mm)	Type	Wavelength	Remark
YAGFL25	25.2	26.0	18.0	18.0	19.5	Triplet	1064nm	-
YAGFL25A	25.0	21.0	13.0	17.0	18.8	Triplet	1064nm/635nm	Achromatic
YAGFL40A	40.0	36.0	26.0	22.0	29.8	Triplet	1064nm/635nm	Achromatic
YAGFL47	46.4	41.0	34.0	30.0	32.4	Triplet	1064nm	-
YAGFL47A	47.0	46.0	32.0	27.0	34.9	Triplet	1064nm/635nm	Achromatic
YAGFL50	50.0	36.0	26.0	19.0	39.3	Triplet	1064nm	-
YAGFL50W	50.0	36.0	26.0	26.0	32.3	Triplet	1064nm	With window
YAGFL58	58.2	41.0	34.0	23.0	49.0	Triplet	1064nm	-
YAGFL58A	58.0	41.0	34.0	25.0	47.4	Triplet	1064nm/635nm	Achromatic
YAGFL66	65.8	34.0	24.0	20.5	53.4	Doublet	1064nm	-
YAGFL77	77.0	41.0	34.0	23.0	67.9	Triplet	1064nm	-
YAGFL77A	77.0	41.0	34.0	23.0	70.2	Triplet	1064nm/635nm	Achromatic
YAGFL81	80.6	60.0	46.0	24.5	64.5	Triplet	1064nm	-
YAGFL90	90.0	41.0	35.0	36.0	88.2	Triplet	1064nm	-
YAGFL100W	100.2	29.0	21.0	18.0	86.9	Doublet	1064nm	With window
YAGFL120	121.6	41.0	34.0	17.0	112.5	Triplet	1064nm	-
YAGFL120A	120.0	60.0	46.0	21.0	104.3	Doublet	1064nm	Achromatic
YAGFL125	125.0	52.0	46.0	28.0	114.4	Triplet	1064nm	-
YAGFL135	135.0	52.0	46.0	32.0	126.0	Doublet	1064nm	-
YAGFL163	162.6	41.0	34.0	16.5	155.4	Doublet	1064nm	-
YAGFL201	201.0	60.0	46.0	18.0	189.6	Doublet	1064nm	-

Part No.	EFL (mm)	Dia (mm)	CA1 (mm)	L1 (mm)	WD (mm)	Type	Wavelength	Remarks
YAGFL250A	249.8	57.0	48.0	14.5	237.6	Doublet	1064nm/635nm	Achromatic
532nmFL47	47.0	41.0	34.0	30.0	29.8	Triplet	532nm	-
532nmFL77	77.0	36.0	28.0	20.0	66.4	Doublet	532nm	-
532nmFL80	80.0	45.0	34.0	27.9	63.1	Triplet	532nm	-
532nmFL115	114.5	40.0	30.0	17.0	107.8	Doublet	532nm	-
532nmFL170	170.3	41.0	32.0	27.0	124.8	Doublet	532nm	-
532nmFL200	200.0	38.0	28.0	15.5	193.8	Doublet	532nm	-
532nmFL271	270.6	41.0	32.0	22.7	255.1	Doublet	532nm	-
355nmFL25	25.4	25.0	18.0	21.5	16.1	Triplet	355nm	-
355nmFL35	35.0	38.0	28.0	34.0	22.8	Triplet	355nm	-
355nmFL47Q	47.0	41.0	39.0	28.0	32.7	Triplet	355nm	
355nmFL48	48.2	34.0	22.0	24.5	33.6	Doublet	355nm	-
355nmFL60	60.0	40.0	28.0	27.0	47.8	Triplet	355nm	-
355nmFL63.7	63.7	36.0	24.0	22.0	51.7	Triplet	355nm	-
355nmFL86	86.4	40.0	28.0	23.2	65.1	Doublet	355nm	-
355nmFL92.6	92.6	58.0	46.0	34.0	84.1	Doublet	355nm	
355nmFL115	115.0	40.0	30.0	30.0	98.8	Doublet	355nm	-
266nmFL24	24.0	27.0	18.0	20.0	13.8	Triplet	266nm	-
266nmFL46	46.3	23.0	40.0	20.0	43.1	Doublet	266nm	-
266NMFL57	57.3	40.0	28.0	23.5	44.6	Triplet	266nm	-
266nmFL82	82.4	48.0	36.0	25.0	75.1	Doublet	266nm	-
266nmFL115	115.0	57.0	36.0	25.0	103.0	Doublet	266nm	-

Achromatic Cemented Focusing Lens

These are cemented doublet lenses for 1064nm laser, as well as colour corrected for visible wavelength, They are made up of a combination of low dispersion crown glass and high dispersion flint glass. They are suitable for laser cutting and welding applications where a vision system is equipped.

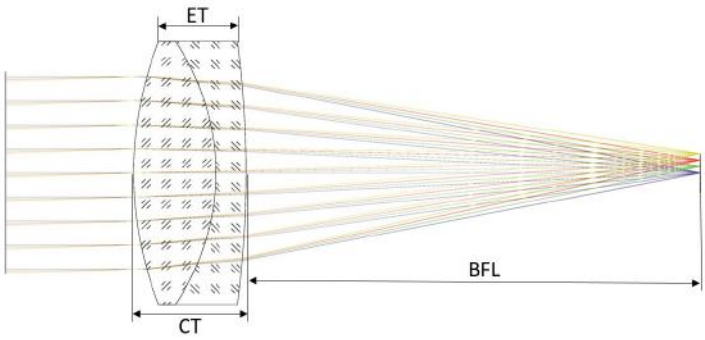

1064-650nm

Part No.	Focal Length (mm)	Diameter (mm)	Center Thickness (mm)	Edge Thickness (mm)	Back Focal Length (mm)	Wavelength (nm)
YAGFL-80-DA	80	41	18.9	12.3	70.9	1064 & 450-750
YAGFL-100-DA	100	41	17.8	12.3	89.5	1064 & 450-750
YAGFL-120-DA	120	41	16.8	12.3	110.9	1064 & 450-750
YAGFL-148-DA	148	41	15.7	12.3	140.2	1064 & 450-750

450-650nm

Part No.	Focal Length (mm)	Diameter (mm)	Center Thickness (mm)	Edge Thickness (mm)	Back Focal Length (mm)	Wavelength (nm)
450-675NMFL100D	100.0	25.0	7.9	6.0	96.23	450-675
450-675NMFL125D	125.0	25.0	7.5	6.0	121.5	450-675
450-675NMFL150D	150.0	25.0	7.2	5.9	146.7	450-675
450-675NMFL300D	300.0	25.0	6.6	5.9	297.1	450-675
450-675NMFL350D	350.0	25.0	6.5	5.9	347.3	450-675
450-675NMFL400D	400.0	25.0	6.5	6.0	398.1	450-675
450-675NMFL75D	75.0	25.0	8.5	5.9	70.9	450-675

Aspheric Lens

Compared to conventional spherical lens, the most significant advantage of the aspherical lens is that it can perform spherical aberration correction. The aspheric lens allows the designer to correct the aberration with fewer optical lenses than the spherical lenses, so the optical system can be lower at cost and more compact in size.
As shown in the following figure, incident light rays focus at different points due to spherical aberration, which is unavoidable for all spherical lenses. While light rays focus to a small point for the aspherical lens.
We supply aspheric lens for fiber laser 1030-1090nm in below table, custoimized aspheric lens is also welcomed .

Specifications	
Diameter Tolerance	+0/-0.13mm
Thickness Tolerance	±0.25mm
Focal Length Tolerance	±2%
Edge Thickness Variation (ETV)	≤3 arc min.
Clear Aperture	>90%
Aspheric Accuracy	≤1μm P-V
Surface Quality	40-20 S-D
AR Coating	R<0.2% per surface @1030-1090nm
Material	Suprasil 313 or Coning 7980

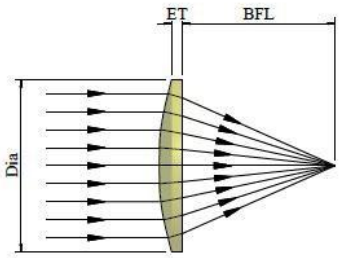

Aspherical Lens

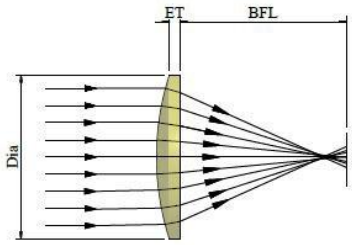

Spherical Lens

Part No.	Dia (mm)	EFL (mm)	BFL (mm)	ET(mm)
LFAS-25-60-ET8.2	25.0	60.0	53.5	8.2
LFAS-25-70-ET6.5	25.0	70.0	63.7	6.5
LFAS-25-80-ET9.8	25.0	80.0	73.1	9.8
LFAS-1.5-100-ET4	38.1	100.0	95.2	4
LFAS-1.5-125-ET4	38.1	125.0	120.7	4
LFAS-1.5-150-ET4	38.1	150.0	146.0	4
LFAS-1.5-200-ET4	38.1	200.0	196.4	4

NOTE: High power focusing lenses of different focal lengths are available upon request.

LBK/LFS Focusing Lens

This series of focusing lenses are made of BK7 (H-K9L) or fused silica; light enters from one side and exits from the opposite side.
Its purpose is to modify the wavefront curvature of the light, and focus the laser beam onto a very small precise spot size so that it is widely used in engraving graphic images, welding metal pieces together or cutting various types of materials. Following lenses are coated with the most common anti-reflective coating at 1060-1080/808/532/355/266nm.

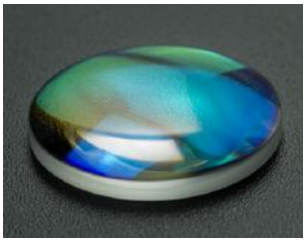

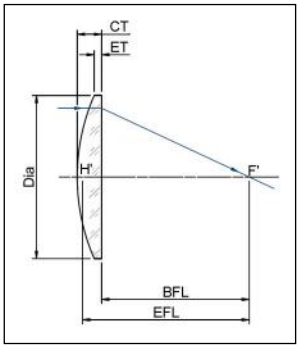

Specifications	
Diameter Tolerance	+0/-0.13mm
Thickness Tolerance	±0.25mm
Focal Length Tolerance	±2%
Edge Thickness Variation (ETV)	≤3 arc min.
Clear Aperture	>90%
Surface Flatness	λ/4 per 1" Dia @632.8nm
Surface Quality	40-20 S-D
AR Coating	R<0.2% per surface

Plano-Convex Converging Lens

Part No.	Dia (mm)	EFL (mm)	ET (mm)	Material	Wavelength
LBK-0.5-15-ET2	12.7	15.0	2.0	BK7	1064nm
LBK-0.5-20-ET2	12.7	20.0	2.0	BK7	1064nm
LBK-0.5-30-ET2	12.7	30.0	2.0	BK7	1064nm
LBK-0.5-50-ET2	12.7	50.0	2.0	BK7	1064nm
LBK-0.5-75-ET2	12.7	75.0	2.0	BK7	1064nm
LBK-0.5-100-ET2	12.7	100.0	2.0	BK7	1064nm
LBK-0.5-120-ET2	12.7	120.0	2.0	BK7	1064nm
LBK-0.5-140-ET2	12.7	140.0	2.0	BK7	1064nm
LBK-0.5-160-ET2	12.7	160.0	2.0	BK7	1064nm
LBK-1-25-ET2.5	25.4	25.0	2.5	BK7	1064nm
LBK-1-35-ET2	25.4	35.0	2.0	BK7	1064nm
LBK-1-40-ET2.2	25.4	40.0	2.2	BK7	1064nm
LBK-1-50-ET2	25.4	50.0	2.0	BK7	1064nm
LBK-1-60-ET2	25.4	60.0	2.0	BK7	1064nm
LBK-1-70-ET2	25.4	70.0	2.0	BK7	1064nm
LBK-1-75-ET2	25.4	75.0	2.0	BK7	1064nm
LBK-1-100-ET2	25.4	100.0	2.0	BK7	1064nm
LBK-1-125-ET2	25.4	125.0	2.0	BK7	1064nm
LBK-1-150-ET2	25.4	150.0	2.0	BK7	1064nm
LBK-1-175-ET2	25.4	175.0	2.0	BK7	1064nm
LBK-1-200-ET2	25.4	200.0	2.0	BK7	1064nm
LBK-1-250-ET2	25.4	250.0	2.0	BK7	1064nm
LBK-1-300-ET2	25.4	300.0	2.0	BK7	1064nm
LBK-1-350-ET2	25.4	350.0	2.0	BK7	1064nm
LBK-1-400-ET2	25.4	400.0	2.0	BK7	1064nm

Part No.	Dia (mm)	EFL (mm)	ET (mm)	Material	Wavelength
LBK-1-500-ET2	25.4	500.0	2.0	BK7	1064nm
LBK-1-750-ET5	25.4	750.0	5.0	BK7	1064nm
LBK-30-80-ET2	30.0	80.0	2.0	BK7	1064nm
LBK-30-100-ET2	30.0	100.0	2.0	BK7	1064nm
LBK-30-120-ET2	30.0	120.0	2.0	BK7	1064nm
LBK-50-100-ET3	50.0	100.0	3.0	BK7	1064nm
LBK-50-150-ET3	50.0	150.0	3.0	BK7	1064nm
LBK-50-200-ET3	50.0	200.0	3.0	BK7	1064nm
LBK-50-250-ET2	50.0	250.0	2.0	BK7	1064nm
LBK-50-300-ET2	50.0	300.0	2.0	BK7	1064nm
LBK-50-400-ET2	50.0	400.0	2.0	BK7	1064nm
LBK-50-450-ET2	50.0	450.0	2.0	BK7	1064nm
LBK-50-500-ET2	50.0	500.0	2.0	BK7	1064nm
LBK-50-600-ET2	50.0	600.0	2.0	BK7	1064nm
LBK-50-800-ET2	50.0	800.0	2.0	BK7	1064nm
LBK-50-1000-ET2	50.0	1000.0	2.0	BK7	1064nm
LFS-19-25-ET2	19.0	25.0	2.0	Fused Silica	1030 -1090nm
LFS-19-30-ET2	19.0	30.0	2.0	Fused Silica	1030 -1090nm
LFS-19-50-ET2	19.0	50.0	2.0	Fused Silica	1030 -1090nm
LFS-1-35-ET2	25.4	35.0	2.0	Fused Silica	1030 -1090nm
LFS-1-50-ET2	25.4	50.0	2.0	Fused Silica	1030 -1090nm
LFS-1-75-ET2	25.4	75.0	2.0	Fused Silica	1030 -1090nm
LFS-1-100-ET2	25.4	100.0	2.0	Fused Silica	1030 -1090nm
LFS-1-125-ET2	25.4	125.0	2.0	Fused Silica	1030 -1090nm
LFS-1-150-ET2	25.4	150.0	2.0	Fused Silica	1030 -1090nm
LFS-1-200-ET2	25.4	200.0	2.0	Fused Silica	1030 -1090nm
LFS-1-250-ET2	25.4	250.0	2.0	Fused Silica	1030 -1090nm
LFS-1-300-ET2	25.4	300.0	2.0	Fused Silica	1030 -1090nm
LFS-1-500-ET2	25.4	500.0	2.0	Fused Silica	1030 -1090nm
LFS-1-1000-ET2	25.4	1000.0	2.0	Fused Silica	1030 -1090nm
LFS-18-68.6-ET1.7G	18.0	68.6	1.7	Fused Silica	515-545nm
LFS-18-79-ET2.9G	18.0	79.0	2.0	Fused Silica	515-545nm
LFS-25-84.5-ET3.4G	25.0	84.5	3.4	Fused Silica	515-545nm
LFS-25-93.7-ET3.7G	25.0	93.7	3.7	Fused Silica	515-545nm
LFS-25-101-ET2.3G	25.0	101.0	2.3	Fused Silica	515-545nm
LFS-25-106.78-ET2.4G	25.0	106.8	2.4	Fused Silica	515-545nm
LFS-25-165-ET2G	25.0	165.0	2.0	Fused Silica	515-545nm
LFS-25.4-89.3-2.5G	25.4	89.3	2.5	Fused Silica	515-545nm

NOTE: Focusing lenses at different FL, size, material and coating are available upon request.

Part No.	Dia (mm)	EFL (mm)	ET (mm)	Material	Wavelength
LFS-25.4-99-ET2.7G	25.4	99.0	2.7	Fused Silica	515-545nm
LFS-26-80.6-ET2.7G	26.0	80.6	2.7	Fused Silica	515-545nm
LFS-34-65.6-ET1.8G	34.0	65.6	1.8	Fused Silica	515-545nm
LFS-36-220.7-ET3.4G	36.0	220.7	3.4	Fused Silica	515-545nm
LFS-40-225-ET3G	40.0	225.0	3.0	Fused Silica	515-545nm
LFS-17-46.7-ET2U	17.0	46.7	2.0	Fused Silica	355nm
LFS-25-92.8-ET1.9U	25.0	92.8	1.9	Fused Silica	355nm
LFS-25-171-ET2.7U	25.0	171.0	2.7	Fused Silica	355nm
LFS-25.4-68.3-ET1.9U	25.4	68.3	1.9	Fused Silica	355nm
LFS-30-75.1-ET1.7U	30.0	75.1	1.7	Fused Silica	355nm
LFS-30-75.7-ET2.3U	30.0	75.7	2.3	Fused Silica	355nm
LFS-30-78.4-ET1.9U	30.0	78.4	1.9	Fused Silica	355nm
LFS-30-81.3-ET2U	30.0	81.3	2.0	Fused Silica	355nm
LFS-30-84.3-ET2.1U	30.0	84.3	2.1	Fused Silica	355nm
LFS-30-91-ET2.3U	30.0	91.0	2.3	Fused Silica	355nm
LFS-30-100-ET1.6U	30.0	100.0	1.6	Fused Silica	355nm
LFS-30-127-ET1.8U	30.0	127.0	1.8	Fused Silica	355nm
LFS-30-165-ET1.5U	30.0	165.0	1.5	Fused Silica	355nm
LFS-21-82.3-ET2.6V	21.0	82.3	2.6	Fused Silica	266nm
LFS-25-67.3-ET3.6V	25.0	67.3	3.6	Fused Silica	266nm
LFS-25-76.7-ET2.9V	25.0	76.7	2.9	Fused Silica	266nm
LFS-25-85.9-ET6.3V	25.0	85.9	6.3	Fused Silica	266nm
LFS-25-127.5-ET3.3V	25.0	127.5	3.3	Fused Silica	266nm
LFS-25-162-ET2.4V	25.0	162.0	2.4	Fused Silica	266nm
LFS-32-68.5-ET2.5V	32.0	68.5	2.5	Fused Silica	266nm
LFS-70-194-ET5.5V	70.0	194.0	5.5	Fused Silica	266nm

NOTE: Focusing lenses at different FL, size, material and coating are available upon request.

Plano-Concave Diverging Lens

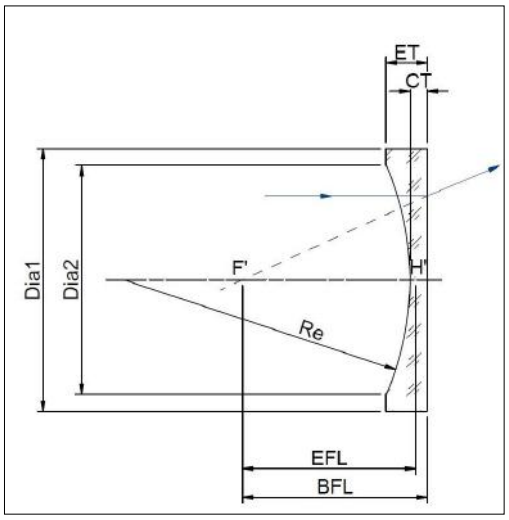

Specifications	
Diameter Tolerance	+0/-0.13mm
Thickness Tolerance	±0.25mm
Focal Length Tolerance	+/-2%
Edge Thickness Variation (ETV)	<=3 arc min.
Clear Aperture	>90%
Surface Figure	λ/4 per 1'' Dia @632.8nm
Surface Quality	40-20 S-D
AR Coating	R<0.2% per surface

Part No.	Dia (mm)	EFL (mm)	ET (mm)	Material	Wavelength
LBK-0.5+15-ET2	12.7	-15.0	2.0	BK7	1064nm
LBK-0.5+20-ET2	12.7	-20.0	2.0	BK7	1064nm
LBK-0.5+25-ET2	12.7	-25.0	2.0	BK7	1064nm
LBK-0.5+30-ET2	12.7	-30.0	2.0	BK7	1064nm
LBK-0.5+40-ET2	12.7	-40.0	2.0	BK7	1064nm
LBK-15+50-ET2.5-YG	15.0	-50.0	2.5	BK7	1064/532nm
LBK-1+75-ET5	25.4	-75.0	5.0	BK7	1064nm
LBK-1+125-ET5	25.4	-125.0	5.0	BK7	1064nm
LBK-1+150-ET5	25.4	-150.0	3.0	BK7	1064nm
LBK-1+500-ET5	25.4	-500.0	5.0	BK7	1064nm
LFS-12+2.5-ET2.4	12.0	-64.2	2.4	Fused Silica	1030 -1090nm
LFS-12+16-ET3.2	12.0	-16.0	3.2	Fused Silica	1030 -1090nm
LFS-12+25-ET3.1	12.0	-25.0	3.1	Fused Silica	1030 -1090nm
LFS-12+1-ET3.2	12.0	-25.4	3.2	Fused Silica	1030 -1090nm
LFS-12+34.3-ET2.7	12.0	-34.3	2.7	Fused Silica	1030 -1090nm
LFS-12+39.2-ET3	12.0	-39.2	3.0	Fused Silica	1030 -1090nm
LFS-12+64.2-ET2.4	12.0	-64.2	2.4	Fused Silica	1030 -1090nm
LFS-12.5+0.37-ET4	12.5	-9.5	4.0	Fused Silica	1030 -1090nm
LFS-12.5+0.5-ET4	12.5	-12.7	4.0	Fused Silica	1030 -1090nm
LFS-12.5+16-ET4.3	12.5	-16.0	4.3	Fused Silica	1030 -1090nm
LFS-15+50-ET2.5	15.0	-50.0	2.5	Fused Silica	1030 -1090nm

Part No.	Dia (mm)	EFL (mm)	ET (mm)	Material	Wavelength
LFS-17.5+36.8-ET3.4	17.5	-36.8	3.4	Fused Silica	1030 -1090nm
LFS-17.5+65.4-ET3	17.5	-65.4	3.0	Fused Silica	1030 -1090nm
LFS-28+252.7-ET3.2	28.0	-252.7	3.2	Fused Silica	1030 -1090nm
LFS-36+189.7-ET4.7	36.0	-189.7	4.7	Fused Silica	1030 -1090nm
LFS-36+192.8-ET4.6	36.0	-192.8	4.6	Fused Silica	1030 -1090nm
LFS-36+383.9-ET4.7	36.0	-384.0	4.7	Fused Silica	1030 -1090nm
LFS-8+7.35-ET2.9G	8.0	-7.4	2.9	Fused Silica	515-545nm
LFS-8+3.8-ET4.3G	8.0	-3.8	4.3	Fused Silica	515-545nm
LFS-8+7.35-ET2.9G	8.0	-7.4	2.9	Fused Silica	515-545nm
LFS-8+8.9-ET3.4G	8.0	-8.9	3.4	Fused Silica	515-545nm
LFS-8+13.4-ET2.1G	8.0	-13.4	2.1	Fused Silica	515-545nm
LFS-10+5.5-ET5.8G	10.0	-5.5	5.8	Fused Silica	515-545nm
LFS-10+6.7-ET4.8G	10.0	-6.7	4.8	Fused Silica	515-545nm
LFS-10+8.46-ET4.1G	10.0	-8.5	4.1	Fused Silica	515-545nm
LFS-10+14.9-ET3G	10.0	-14.9	3.0	Fused Silica	515-545nm
LFS-10+18.8-ET2.5G	10.0	-18.8	2.5	Fused Silica	515-545nm
LFS-10+24.7-ET2.6G	10.0	-24.7	2.6	Fused Silica	515-545nm
LFS-10+35.7-ET2G	10.0	-35.7	2.0	Fused Silica	515-545nm
LFS-10+51-ET2.3G	10.0	-51.0	2.3	Fused Silica	515-545nm
LFS-10+73.3-ET2.4G	10.0	-73.3	2.4	Fused Silica	515-545nm
LFS-12+110-ET3.5G	12.0	-110.0	3.5	Fused Silica	515-545nm
LFS-20+54.5-ET4.2G	20.0	-54.5	4.2	Fused Silica	515-545nm
LFS-20+77.4-ET2.6G	20.0	-77.4	2.6	Fused Silica	515-545nm
LFS-34-54.7-ET2.5G	34.0	-54.7	2.5	Fused Silica	515-545nm
LFS-8+9.2-ET2.4U	8.0	-9.2	2.4	Fused Silica	355nm
LFS-8+46.5-ET2.5U	8.0	-46.5	2.5	Fused Silica	355nm
LFS-10+5.11-ET5U	10.0	-5.1	5.0	Fused Silica	355nm
LFS-10+11-ET3.7U	10.0	-11.0	3.7	Fused Silica	355nm
LFS-10+13.7-ET4.5U	10.0	-13.7	4.5	Fused Silica	355nm
LFS-10+15.9-ET2.6U	10.0	-15.9	2.6	Fused Silica	355nm
LFS-10+23.3-ET3U	10.0	-23.3	3.0	Fused Silica	355nm
LFS-10+34.3-ET2.8U	10.0	-34.3	2.8	Fused Silica	355nm

NOTE: Focusing lenses at different FL, size, material and coating are available upon request.

Part No.	Dia (mm)	EFL (mm)	ET (mm)	Material	Wavelength
LFS-10+63.9-ET2.7U	10.0	-63.9	2.7	Fused Silica	355nm
LFS-10+115-ET2.8U	10.0	-115.0	2.8	Fused Silica	355nm
LFS-12+34.3-ET2.7U	12.0	-34.3	2.7	Fused Silica	355nm
LFS-12+57.4-ET2.2U	12.0	-57.4	2.2	Fused Silica	355nm
LFS-12.5+6.57-ET5U	12.5	-6.6	5.0	Fused Silica	355nm
LFS-12.5+0.5-ET3.5U	12.5	-12.7	3.5	Fused Silica	355nm
LFS-14+27.4-ET4.5U	14.0	-27.4	4.5	Fused Silica	355nm
LFS-14+55.9-ET3.1U	14.0	-55.9	3.1	Fused Silica	355nm
LFS-14+129-ET2.8U	14.0	-129.0	2.8	Fused Silica	355nm
LFS-17+137-ET3.4U	17.0	-137.0	3.4	Fused Silica	355nm
LFS-18+58.9-ET2.7U	18.0	-58.9	2.7	Fused Silica	355nm
LFS-18+89.1-ET2.5U	18.0	-89.1	2.5	Fused Silica	355nm
LFS-18+92.7-ET2.5U	18.0	-92.7	2.5	Fused Silica	355nm
LFS-20+45.0-ET4U	20.0	-45.0	4.0	Fused Silica	355nm
LFS-20+53.2-ET4.4U	20.0	-53.2	4.4	Fused Silica	355nm
LFS-1+50-ET5.8U	25.4	-50.0	5.8	Fused Silica	355nm
LFS-7+9.7-ET2.2V	7.0	-9.7	2.2	Fused Silica	266nm
LFS-8+9.5-ET3.4V	8.0	-9.5	3.4	Fused Silica	266nm
LFS-8+11.7-ET3.4V	8.0	-11.7	3.4	Fused Silica	266nm
LFS-10+28.5-ET3.1V	10.0	-28.5	3.1	Fused Silica	266nm
LFS-12+13.6-ET3.2V	12.0	-13.6	3.2	Fused Silica	266nm
LFS-12+26.1-ET3V	12.0	-26.1	3. 0	Fused Silica	266nm
LFS-12+32.2-ET5.1V	12.0	-32.2	5.1	Fused Silica	266nm
LFS-12+64.1-ET3.5V	12.0	-64.1	3.5	Fused Silica	266nm
LFS-12+108-ET2.8V	12.0	-108.0	2.8	Fused Silica	266nm
LFS-17+410-ET2.1V	17.0	-410.0	2.1	Fused Silica	266nm

NOTE: Focusing lenses at different FL, size, material and coating are available upon request.

RBK/RFS Reflective Mirror

Laser reflecting mirrors must have low reflection losses, high optical quality and good resistance against extreme optical intensity. Laser mirrors are commonly fabricated based on glass substrates such as BK7 or fused silica.

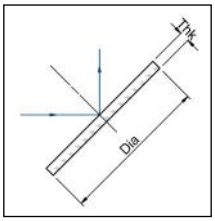

Specifications	
Diameter Tolerance	+0/-0.13mm
Thickness Tolerance	±0.25mm
Parallelism	≤3 arc min.
Clear Aperture	>90%
Surface Flatness	λ/4 per 1"Dia @632.8nm
Surface Quality	40-20 S-D
Angle of Incidence	45°

Part No.	Dia (mm)	Thk (mm)	Material	Wavelength
RBK-19-3	19.0	3.0	BK7	HR@1064nm
RBK-19-3YG	19.0	3.0	BK7	HR@1064/532nm
RBK-19-3YGR	19.0	3.0	BK7	HR@1064/650/532nm
RBK-0.75-3YR	19.1	3.0	BK7	HR@1064/650nm
RBK-25-3	25.0	3.0	BK7	HR@1064nm
RBK-25-3YG	25.0	3.0	BK7	HR@1064/532nm
RBK-25-3YGR	25.0	3.0	BK7	HR@1064/650/532nm
RBK-25-1AY	25.0	1.0	BK7	HR@1064/755nm
RBK-1-7YG	25.4	7.0	BK7	HR@1064/532nm
RBK-1-9.5	25.4	9.5	BK7	HR@1064nm
RBK-30-5	30.0	5.0	BK7	HR@1064nm
RBK-1.5-4	38.1	4.0	BK7	HR@1064nm
RBK-1.5-6.3	38.1	6.3	BK7	HR@1064nm
RBK-2-6.3	50.8	6.3	BK7	HR@1064nm
RBK-2-9.5	50.8	9.5	BK7	HR@1064nm
RBK-1-9.5G	25.4	9.5	BK7	HR@532nm
RBK-30-5G	30.0	5.0	BK7	HR@532nm
RBK-2-9.5G	50.8	9.5	BK7	HR@532nm
RFS-19-5	19.0	5.0	Fused Silica	HR@1064nm
RFS-30-5	30.0	5.0	Fused Silica	HR@1064nm
RFS-50-5	50.0	5.0	Fused Silica	HR@1064nm
RFS-50-4	50.0	4.0	Fused Silica	HR@1064nm
RFS-0.75-3.2U	19.1	3.2	Fused Silica	HR@355nm
RFS-0.75-9.5U	19.1	9.5	Fused Silica	HR@355nm
RFS-20-2U	20.0	2.0	Fused Silica	HR@355nm
RFS-1-3U	25.4	3.0	Fused Silica	HR@355nm
RFS-1-6.3U	25.4	6.3	Fused Silica	HR@355nm
RFS-30-5U	30.0	5.0	Fused Silica	HR@355nm
RFS-1.5-3U	38.1	3.0	Fused Silica	HR@355nm
RFS-38.5-3U	38.5	3.0	Fused Silica	HR@355nm
RFS-50-5U	50.0	5.0	Fused Silica	HR@355nm
RFS-2-6.3U	50.8	6.3	Fused Silica	HR@355nm
RFS-30-5V	30.0	5.0	Fused Silica	HR@266nm

NOTE: Reflective mirrors of different sizes are available upon request.

Scanning Mirror

Scanning mirrors are light weight rectangular mirrors used for high speed two-axis laser scanning systems. The dimensions for each mirror are calculated accordingly with the laser beam size. The mirror is designed with high reflectivity of 99.5% or above. The scanning mirror is generally mounted onto a galvanometer for scanning purposes. For two axis scan mirrors, commonly the Y mirror has a bigger size compared to the X mirror. This is due to the fact that the X mirror is used to scan the Y mirror rather than the object directly.

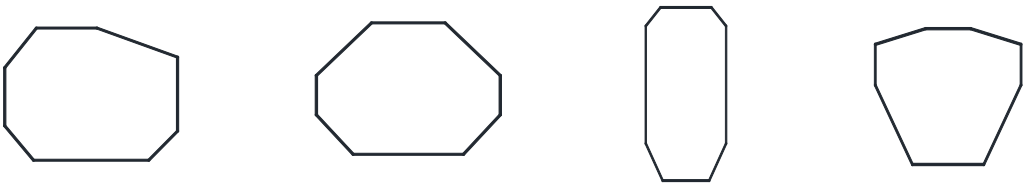

Part No.	Dimension L*W*T (mm)	Substrate	Beam Size	X/Y
SCM-8.4x11.5x1.05	8.4x11.5x1.05	Si/BK7/FS	8.0	X1
SCM-10.6x25.4x1.7	10.6x25.4x1.7	Si/BK7/FS	8.0	X2
SCM-10.1x15.1x1.05	10.1x15.1x1.05	Si/BK7/FS	8.0	Y1
SCM-12.6x15x1.7	12.6x15.0x1.7	Si/BK7/FS	8.0	Y2
SCM-13.7x20.3x1.5	13.7x20.3x1.5	Si/BK7/FS	10.0	X3
SCM-14.7x19.4x1.7	14.7x19.4x1.7	Si/BK7/FS	10.0	X5
SCM-16x21x2	16.0x21.0x2.0	Si/BK7/FS	10.0	X7
SCM-16.4x28x1.7	16.4x28.0x1.7	Si/BK7/FS	10.0	Y5
SCM-15.7x20.2x2.5	15.7x20.2x2.5	Si/BK7/FS	12.0	X6
SCM-17.2x22.5x1.2	17.2x22.5x1.2	Si/BK7/FS	12.0	X8
SCM-17.7x24.4x2	17.7x24.4x2.0	Si/BK7/FS	12.0	Y4
SCM-17.7x31.5x2.5	17.7x31.5x2.5	Si/BK7/FS	12.0	Y6
SCM-18.3x24.6x3.2	18.3x24.6x3.2	Si/BK7/FS	12.0	X9
SCM-18.9x30.5x2.4	18.9x30.5x2.4	Si/BK7/FS	12.0	Y8
SCM-19x29x2	19.0x29.0x2.0	Si/BK7/FS	12.0	X10
SCM-19x32x2	19.0x32.0x2.0	Si/BK7/FS	12.0	Y7
SCM-20x25x2	20.0x25.0x2.0	Si/BK7/FS	12.0	X11/Y14
SCM-21.3x38.9x3.2	21.3x38.9x3.2	Si/BK7/FS	12.0	Y9
SCM-21x30x2	21.0x30.0x2.0	Si/BK7/FS	15.0	Y18
SCM-22.1x28.8x3.2	22.1x28.8x3.2	Si/BK7/FS	15.0	X12
SCM-23x34x2	23.0x34.0x2.0	Si/BK7/FS	15.0	Y10
SCM-23x30x2	23.0x30.0x2.0	Si/BK7/FS	15.0	Y11
SCM-24x37x4	24.0x37.0x4.0	Si/BK7/FS	15.0	X13
SCM-24.8x39.4x3.2	24.8x39.4x3.2	Si/BK7/FS	15.0	Y12
SCM-25x35x2	25.0x35.0x2.0	Si/BK7/FS	15.0	X15/X16/X17

Part No.	Dimension L*W*T (mm)	Substrate	Beam Size	X/Y
SCM-25x30x2	25.0x30.0x2.0	Si/BK7/FS	20.0	X14
SCM-27x32x2	27.0x32.0x2.0	Si/BK7/FS	20.0	X18
SCM-30x42x4	30.0x42.0x4.0	Si/BK7/FS	20.0	Y13
SCM-30x35x2	30.0x35.0x2.0	Si/BK7/FS	20.0	Y15
SCM-32x39x2	32.0x39.0x2.0	Si/BK7/FS	20.0	Y17
SCM-24x37x2.5	24.0x37.0x2.5	Si/BK7	25.0	X24
SCM-31x49x2.5	31.0x49.0x2.5	Si/BK7	25.0	Y24
SCM-35x45x2	35.0x45.0x2.0	Si/BK7/FS	25.0	Y16/X20
SCM-34x55x4	34.0x55.0x4.0	Si/BK7/FS	25.0	X19
SCM-40x64x5	40.0x64.0x5.0	Si/BK7/FS	30.0	X22
SCM-40.1x54.9x4	40.1x54.9x4.0	Si/BK7/FS	30.0	X21
SCM-42x65x2	42.0x65.0x2.0	Si/BK7/FS	30.0	Y20
SCM-43x63x4	43.0x63.0x4.0	Si/BK7/FS	30.0	Y19
SCM-45x70x4	45.0x70.0x(1.5-4)	Si/BK7/FS	30.0	X23
SCM-46.7x70.1x4	46.7x70.1x4.0	Si/BK7/FS	30.0	Y21
SCM-47x76x5	47.0x76.0x5.0	Si/BK7/FS	30.0	Y22
SCM-60x80x4	60.0x80.0x(1.5-4)	Si/BK7/FS	40.0	Y23

Surface figure: λ/2 @633nm
Scratch/Dig: 40/20
Reflective coating:
Si, Gold Coating for Infrared Laser (10.6μm)
Si/BK7/FS, Dielectric or Silver Coating for Nd:YAG Laser (1064nm/650nm)
BK7/FS, Dielectric Coating for Green & Visible Laser (532nm/650nm)
FS, Dielectric Coating for UV Laser (266nm /355nm)

NOTE: Scanning mirror mounts are available upon request.

WBK/WFS Protective Window

Fused Silica/BK7 is known for its low coefficient of thermal expansion, it has high transmittance for light from ultraviolet to near infrared range, low scattering and excellent cost effectiveness. Coated Fused Silica windows are widely used in fiber laser cutting and welding systems.

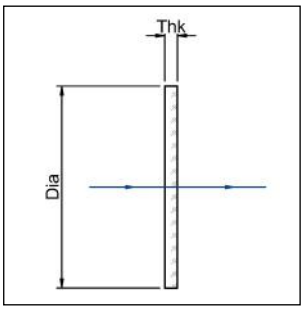

Specifications	
Diameter Tolerance	+0/-0.13mm
Thickness Tolerance	±0.25mm
Parallelism	< 3 arc min.
Clear Aperture	>90%
Surface Flatness	λ/4 per 1"Dia@632.8nm
Surface Quality	40-20 S-D

Part No.	Dia (mm)	Thk (mm)	Material	Wavelength
WBK-24-1.4	24.0	1.4	BK7	1064nm
WBK-24-2	24.0	2.0	BK7	1064nm
WBK-25-1.1	25.0	1.1	BK7	1064nm
WBK-30-1.4	30.0	1.4	BK7	1064nm
WBK-38-3	38.0	3.0	BK7	1064nm
WBK-60-3	60.0	3.0	BK7	1064nm
WBK-72-3	72.0	3.0	BK7	1064nm
WBK-75-1.6	75.0	1.6	BK7	1064nm
WBK-76-3	76.0	3.0	BK7	1064nm
WBK-78-1.5	78.0	1.5	BK7	1064nm
WBK-78-3	78.0	3.0	BK7	1064nm
WBK-80-2.5	80.0	2.5	BK7	1064nm
WBK-83-3	83.0	3.0	BK7	1064nm
WBK-84-2YG	84.0	2.0	BK7	532nm/1064nm
WBK-85-2	85.0	2.0	BK7	1064nm
WBK-86-2.5	86.0	2.5	BK7	1064nm
WBK-96-3	96.0	3.0	BK7	1064nm
WBK-97-2.5	97.0	2.5	BK7	1064nm
WBK-98-2.5	98.0	2.5	BK7	1064nm
WBK-106-3	106.0	3.0	BK7	1064nm
WBK-110-2.5	110.0	2.5	BK7	1064nm
WBK-116-2	116.0	2.0	BK7	1064nm

Part No.	Dia (mm)	T (mm)	Material	Wavelength
WBK-116-3	116.0	3.0	BK7	1064nm
WBK-120-3	120.0	3.0	BK7	1064nm
WBK-123-3	123.0	3.0	BK7	1064nm
WBK-126-3	126.0	3.0	BK7	1064nm
WBK-128-2	128.0	2.0	BK7	1064nm
WBK-150-3	150.0	3.0	BK7	1064nm
WBK-0.5-2G	12.7	2.0	BK7	532nm
WBK-24-1.4-YG	24.0	1.4	BK7	532/1064nm
WBK-74-2.5G	74.0	2.5	BK7	532nm
WBK-75-2.5G	75.0	2.5	BK7	532nm
WBK-80-4G	80.0	4.0	BK7	532nm
WBK-86-2.5G	86.0	2.5	BK7	532nm
WBK-108-2.5GR	108.0	2.5	BK7	532/650nm
WBK-118-3G	118.0	3.0	BK7	532nm
WBK-126-3G	126.0	3.0	BK7	532nm
WFS-15-2	15.0	2.0	Fused Silica	1030 -1090nm
WFS-18-3	18.0	3.0	Fused Silica	1030 -1090nm
WFS-22-3	22.0	3.0	Fused Silica	1030 -1090nm
WFS-25-3	25.0	3.0	Fused Silica	1030 -1090nm
WFS-1-3	25.4	3.0	Fused Silica	1030 -1090nm
WFS-1-6.35	25.4	6.4	Fused Silica	1030 -1090nm
WFS-28-4	28.0	4.0	Fused Silica	1030 -1090nm
WFS-30-5	30.0	5.0	Fused Silica	1030 -1090nm
WFS-36-2	36.0	2.0	Fused Silica	1030 -1090nm
WFS-38-2	38.0	2.0	Fused Silica	1030 -1090nm
WFS-1.5-5	38.1	5.0	Fused Silica	1030 -1090nm
WFS-50-1.5	50.0	1.5	Fused Silica	1030 -1090nm
WFS-55-1.5	55.0	1.5	Fused Silica	1030 -1090nm
WFS-70-9.5	70.0	9.5	Fused Silica	1030 -1090nm
WFS-110-2.5	110.0	2.5	Fused Silica	1030 -1090nm
WFS-140-4	140.0	4.0	Fused Silica	1030 -1090nm
WFS-16-1.55-YG	16.0	1.55	Fused Silica	515-545/1030-1090nm
WFS-20-2-YG	20.0	2.0	Fused Silica	515-545/1030-1090nm
WFS-1-3G	25.4	3.0	Fused Silica	515-545nm
WFS-43-2G	43.0	2.0	Fused Silica	515-545nm
WFS-1-3U	25.4	3.0	Fused Silica	343-355nm
WFS-38-3U	38.0	3.0	Fused Silica	343-355nm
WFS-90-3U	90.0	3.0	Fused Silica	343-355nm
WFS-104-3U	104.0	3.0	Fused Silica	343-355nm

Beam Combiner

This series of Beam Combiners is made by BK7 (H-K9L) or Fused Silica. It merges two beams into one, whether ultra-violet, visible, or near infrared; it allows users to mix invisible and visible light with an easy means of alignment.

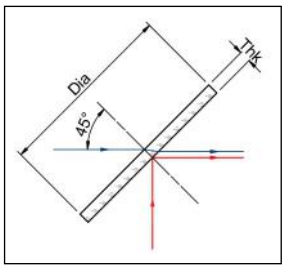

Specifications	
Diameter Tolerance	+0/-0.13mm
Thickness	±0.25mm
Surface Flatness	λ/4 per 1" Dia@632.8nm
Surface Quality	40-20 S-D
AOI	45°

BC Series - Beam Combiner

Part No.	Dia (mm)	Thk (mm)	Material	Wavelength
BCBK-0.5-2	12.7	2.0	BK7	1064nmT/650nmR
BCBK-0.75-3	19.1	3.0	BK7	1064nmT/650nmR
BCBK-1-3	25.4	3.0	BK7	1064nmT/650nmR
BCBK-1-3.4	25.4	3.4	BK7	1064nmT/650nmR
BCBK-1.1-3	27.9	3.0	BK7	1064nmT/650nmR
BCBK-2-5	50.8	5.0	BK7	1064nmT/650nmR
BCBK-1-3.5-1064R	25.4	3.5	BK7	650nmT/1064nmR
BCBK-1-7-1064R	25.4	7.0	BK7	650nmT/1064nmR
BCBK-2-6.35-1064R	50.8	6.4	BK7	650nmT/1064nmR
BCBK-1-3-532T/650R	25.4	3.0	BK7	532nmT/650nmR
BCF-1.5-3-532T/650R	38.1	3.0	Fused Silica	532nmT/650nmR
BCF-1-3.2-355T/650R	25.4	3.2	Fused Silica	355nmT/650nmR
BCF-30-3-355T/650R	30.0	3.0	Fused Silica	355nmT/650nmR
BCF-30-5-355T/650R	30.0	5.0	Fused Silica	355nmT/650nmR
BCF-40-3-355T/650R	40.0	3.0	Fused Silica	355nmT/650nmR
BCF-50-5-355T/650R	50.0	5.0	Fused Silica	355nmT/650nmR

Where:

α is angle of incidence t is thickness

n is index of refraction d is displacement of the material

For example: BCBK-1-3, d=1.0mm @1064nm

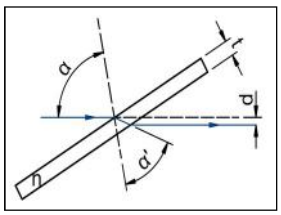

$$d = t\sin\alpha\left(1 - \frac{\cos\alpha}{n\cos\alpha'}\right)$$

BSBK Series- Beam Splitter 1064nm

The common Beam Splitter is used to split laser beam. The performance of Beam splitters is mainly dependent on the coating specifications.

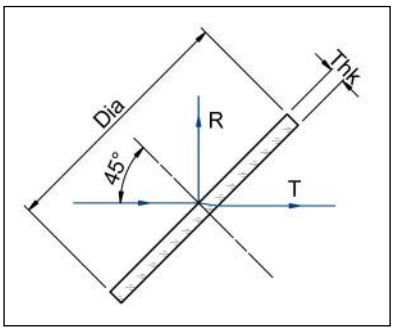

Specifications	
Diameter Tolerance	+0/-0.13mm
Thickness	±0.25mm
Surface Flatness	λ/4 per 1'' Dia@632.8nm
Surface Quality	60-40 S-D
T/R	50/50±5% @polarization

Part No.	Dia (mm)	Thk (mm)	Material	Side 1 Reflectivity (%R)	Polarization	Wavelength
BSBK-0.5-3-1064-S	12.7	3.0	BK7	50%	S-Pol	1064nm
BSBK-1-3-1064-S	25.4	3.0	BK7	50%	S-Pol	1064nm
BSBK-2-3-1064-S	50.8	3.0	BK7	50%	S-Pol	1064nm

NOTE: Beam Splitter for 532nm / 355nm is available upon request.

BSC Series Cube Beam Splitter

BSC-NP Series—Non-polarizing Cube BS

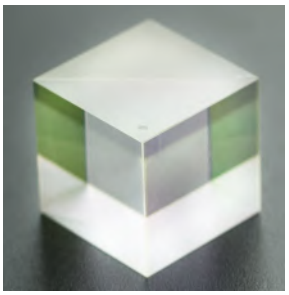

With non-polarizing beam splitter coating on hypotenuse face, this series of cube beam splitters provide 50:50 split ratio independently on the input beam polarization.

Specifications	
Material	BK7 Grade A optical glass
Dimension Tolerance	± 0.2mm
Clear Aperture	>90%
Flatness	λ/4@632.8nm
Beam Deviation	<3 arc min.
Surface Quality	60-40
Absorption	<10%
Transmission	45%±5%
Polarization	<6%
Coating	Non-polarizing beam splitter coating on hypotenuse face AR coating on all entrances
Damage Threshold	>100mJ/cm ^{2} , 20ns, 20Hz, @1064nm

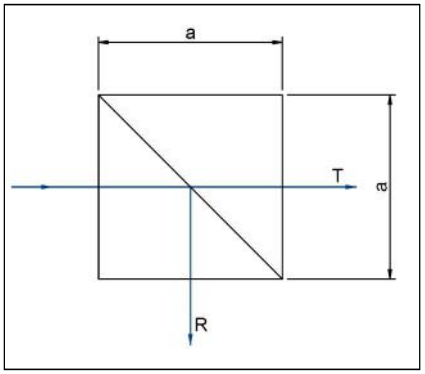

Part No.	Dimension (mm)	Transmission	Wavelength
BSC-0.5-50%R-1064NP	12.7x12.7x12.7	45+/-5%	1064nm
BSC-1-50%R-1064NP	25.4x25.4x25.4	45+/-5%	1064nm

BSC-P Series—Polarizing Cube Beam Cube

With polarization beam splitter coating on hypotenuse face, this series of cube beam splitters transmit P component and reflect S component of polarization.

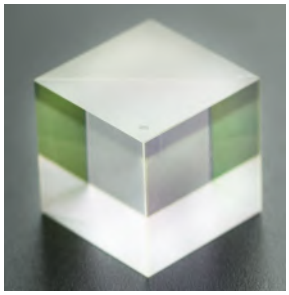

Specifications	
Material	BK7, SF glass
Dimension Tolerance	±0.2mm
Extinction Ratio	>500:1 for narrow band
Surface Quality	60-40 scratch and dig
Clear Aperture	>90%
Beam Deviation	<3 arc min.
Flatness	λ/4@632.8nm per 25mm
Principal Transmittance	Narrow: Tp>95% and Ts<1% Broad: Tp>90% and Ts<1%
Principal Reflectance	Narrow: Rs>99% and Rp<5% Broad: Rs>99% and Rp<10%
Coating	Polarization beam splitter coating on hypotenuse face AR coating on all input and output faces
Damage Threshold	>500mJ/cm^2, 20ns, 20Hz, @1064nm

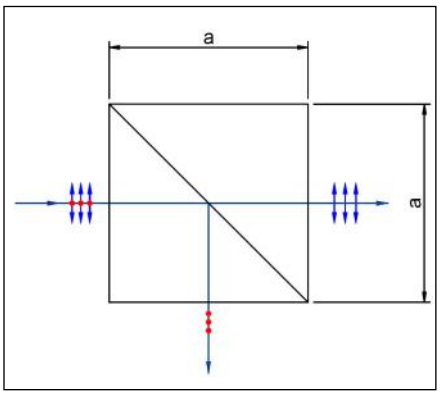

Part No.	Material	Dimension (mm)	Tp:Ts	Wavelength
BSC-0.5-1064P	BK7	12.7x12.7x12.7	>500:1	1064nm
BSC-1-1064P	BK7	25.4x25.4x25.4	>500:1	1064nm

1064nm Nd:YAG Laser Cavity Optics

Laser cavity optics consist of Rear mirror and Front mirror (also called Output coupler or Partial reflector). Rear Mirrors with very high reflectivity (>99.7%) are key optical components in laser resonator. Output Couplers are partially reflective mirrors to extract a portion of the laser beam from the laser resonator. They often require a slight wedge to prevent interference from multiple reflections inside the component.

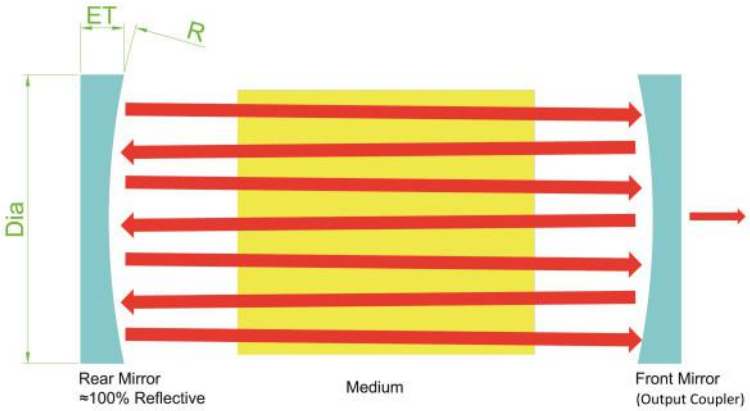

Specifications	
Diameter Tolerance	+0/-0.13mm
Thickness Tolerance	±0.25mm
Centration	< 3 arc minutes
Clear Aperture	>90%
Surface Quality	40-20 S-D
Angle of Incidence	0 degree

Part No.	Dia (mm)	Thickness (mm)	Radius	Reflectivity (%)	Remarks
RFS-0.75-9.5-0	19.1	9.5	Plano	>99.7%	Rear Mirror
RFS-20-10-6MCC	20.0	10.0	6M Concave	>99.7%	Rear Mirror
OCF-0.75-9.5-80%R	19.1	9.5	Plano	80+/-3%	Output Coupler
OCF-20-10-35%R	20.0	10.0	Plano	35+/-3%	Output Coupler
OCF-20-10-50%R	20.0	10.0	Plano	50+/-3%	Output Coupler

RONAR-SMITH® LASER OPTICS — CO_2

- ZnSe/Ge Telecentric Scan Lens
- ZnSe/GaAs F-Theta Scan Lens
- ZnSe Beam Expanders
- ZnSe Focusing Lens
- ZnSe Cylindrical Lens
- ZnSe Axicon Lens
- Si/Mo/Cu Reflective Mirror
- Phase Retarder
- ZnSe Thin Film Polarizer
- ZnSe Protective Window
- ZnSe Beam Combiner
- ZnSe Beam Splitter
- ZnSe High Power CO_2 Optics
- CO_2 Cavity Optics

Telecentric Scan Lens for CO_2 Laser

Telecentric scanning lenses are special configurations in which the arrangement of optics is designed to focus down the beam so that it is always perpendicular to the flat field. This is accomplished by ensuring that the system 'stop' is located at the front focal point of the lens system. The 'stop' is located at the position where the beam is deflected from the axis. In a single-axis scanning system, this location is at the scanning mirror. For two-axis scanning, the stop is mid -way between the mirrors. Adaptors for major scan head providers are available upon request.

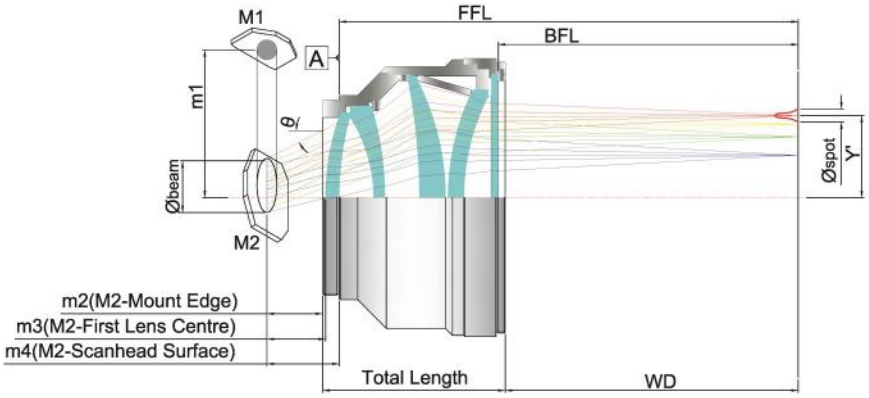

Part No.	EFL (mm)	Scan Field (mm)	Input Beam Φ ($1/e^2$) (mm)	Max. Scan Angle (±deg.)	Thread	WD (mm)	Wavelength
TSL-9.4-30-52	52.0	30x30	20.0	17.0	M85x1	32.0	9.4μm
TSL-9.4-50-75	75.0	50x50	20.0	28.0	M85x1	70.4	9.4μm
TSL-9.4-50-100G	100.0	46x46	20.0	18.8	M85x1	106.0	9.4μm
TSL-9.4-50-100Z-D20	100.0	50x50	20.0	20.8	M85x1	118.8	9.4μm
TSL-9.4-70-120	120.0	70x70	20.0	24.0	M85x1	111.0	9.4μm
TSL-9.4-82-150-D20	150.0	82x82	20.0	20.0	M85x1	132.7	9.4μm
TSL-9.4-100-160-D20	160.0	100x100	20.0	26.4	M85x1	125.3	9.4μm
TSL-9.4-120-160-D20	160.0	122x122	17.5	31.4	M85x1	130.3	9.4μm
TSL-9.4-90-170-D20	170.0	90x90	20.0	25.0	M85x1	119.9	9.4μm
TSL-9.4-120-200-D30	200.0	120x120	30. 0	25.0	M85x1	234.8	9.4μm
TSL-9.4-140-200-D20	200.0	140x140	20.0	30.0	M85x1	237.0	9.4μm
TSL-9.6-70-140ZA	140.0	70x70	15.0	20.0	M85x1	88.3	9.6μm
TSL-10.6-50-100G	100.0	46x46	20.0	18.8	M85x1	106.0	10.6μm
TSL-10.6-70-120	120.0	70x70	20.0	24.0	M85x1	111.0	10.6um

F-Theta Scan Lens 9.4µm/10.6µm

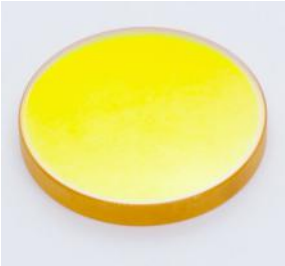

F-Theta lenses are commonly used in conjunction with galvanometer scanning mirrors in laser engraving, cutting, and marking systems. Typically the F-Theta distortion of the lens is kept less than 1% so that it is able to produce a precise spot in the flat field on the image plane.

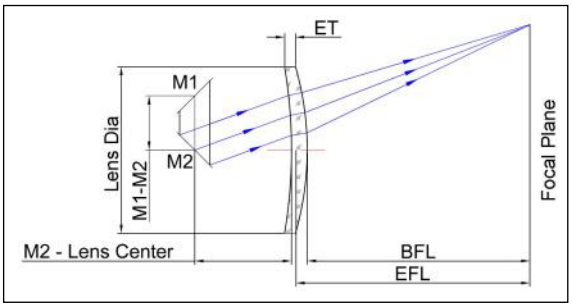

Specifications	
Diameter Tolerance	+0/-0.13mm
Thickness Tolerance	±0.25mm
Focal Length Tolerance	±2%
Edge Thickness Variation (ETV)	≤3 arc min.
Clear Aperture	>90%
Surface Flatness	λ/4 per 1″Dia@632.8nm
Surface Quality	40-20 S-D
AR Coating	R<0.2% per surface @10.6µm

SL1 Series – F-Theta Scan Lens 9.4um

Part No.	EFL (mm)	Scan Field (mm)	Input Beam Φ(1/e²) (mm)	Max. Scan Angle (±deg)	BFL (mm)	Lens Dia (mm)	ET (mm)
SL1-9.4-F100Z-48	100.0	69x69	12.0	28.0	97.2	48.0	2.4
SL1-9.4-F150Z-48	150.0	107x107	12.0	29.0	146.5	48.0	3.1
SL1-9.4-F200Z-48	200.0	140x140	15.0	28.0	197.5	48.0	3.0
SL1-9.4-F250Z-48	250.0	175x175	12.0	28.0	256.0	48.0	3.2
SL1-9.4-F250Z-65	250.0	175x175	20.0	28.0	253.4	65.0	3.2
SL1-9.4-F300Z-48	300.0	210x210	12.0	28.0	308.6	48.0	3.9
SL1-9.4-F360Z-48	359.1	250x250	12.0	28.0	357.9	48.0	4.0
SL1-9.4-F435Z-48	433.0	300x300	12.0	28.0	435.1	48.0	3.0
SL1-9.4-F450Z-48	448.5	320x320	12.0	28.0	462.0	48.0	2.8
SL1-9.4-F480Z-70	480.0	350x350	20.0	28.0	489.1	70.0	3.9
SL1-9.4-F573Z-48	573.0	400X400	12.0	28.0	582.0	48.0	4.2

SL1 Series – F-Theta Scan Lens 10.6um

Part No.	EFL (mm)	Scan Field (mm)	Input Beam Φ(1/e²) (mm)	Max. Scan Angle (±deg)	BFL (mm)	Lens Dia (mm)	ET (mm)
SL1-10.6-F75Z-48	75.0	50x50	10.0	28.0	75.9	48.0	3.0
SL1-10.6-F100Z-48	100.0	69x69	12.0	28.0	97.2	48.0	2.4
SL1-10.6-F150Z-48	150.0	100x100	12.0	28.0	146.5	48.0	3.1
SL1-10.6-F200Z-48	200.0	140x140	12.0	28.0	197.5	48.0	3.0
SL1-10.6-F200Z-70	200.0	140x140	20.0	28.0	208.8	70.0	2.8
SL1-10.6-F250Z-48	250.0	175x175	12.0	28.0	256.0	48.0	3.2
SL1-10.6-F250Z-65	250.0	175x175	20.0	28.0	253.4	65.0	3.2
SL1-10.6-F300Z-48	300.0	210x210	12.0	28.0	308.6	48.0	3.9
SL1-10.6-F360Z-48	360.0	250x250	12.0	26.8	357.9	48.0	4.0
SL1-10.6-F420Z-70	420.0	295x295	20.0	28.0	416.8	70.0	3.5
SL1-10.6-F420Z-75	420.0	300x300	20.0	28.0	416.8	75.0	3.4
SL1-10.6-F430Z-65	430.0	300x300	20.0	25.0	432.6	65.0	3.7

Part No.	EFL (mm)	Scan Field (mm)	Input Beam Φ(1/e^2) (mm)	Max. Scan Angle (±deg)	BFL (mm)	Lens Dia (mm)	ET (mm)
SL1-10.6-F435Z-48	433.0	300x300	12.0	24.9	435.1	48.0	3.0
SL1-10.6-F450Z-48	448.5	320x320	12.0	28.0	462.0	48.0	2.8
SL1-10.6-F480Z-70	480.0	350x350	20.0	28.0	489.1	70.0	3.9
SL1-10.6-F480Z-48	480.0	335x335	12.0	28.0	492.0	48.0	2.6
SL1-10.6-F550Z-60	561.0	400x400	20.0	28.0	562.0	60.0	3.8
SL1-10.6-F573Z-48	573.0	430x430	12.0	28.0	582.0	48.0	4.2
SL1-10.6-F573Z-62	573.0	394x394	20.0	27.0	581.6	62.0	4.0
SL1-10.6-F574Z-75	574.0	430x430	20.0	28.0	591.0	75.0	3.8
SL1-10.6-F620Z-70	620.0	450x450	20.0	28.0	636.0	70.0	3.9
SL1-10.6-F720Z-75	720.0	500x500	20.0	28.0	741.0	75.0	2.7
SL1-10.6-F720Z-48	720.7	531x531	12.0	28.0	734.0	48.0	3.0
SL1-10.6-F740Z-88	740.0	540x540	20.0	28.0	759.0	88.0	4.2
SL1-10.6-F830Z-75	830.0	600x600	20.0	28.0	848.0	75.0	4.0
SL1-10.6-F977Z-48	976.0	715x715	12.0	28.0	990.5	48.0	3.1
SL1-10.6-F1100Z-76	1100.0	700x700	25.0	25.0	1138.0	76.0	5.2
SL1-10.6-F1150Z-48	1150.0	800x800	12.0	28.0	1177.0	48.0	3.0
SL1-10.6-F1191Z-48	1191.6	770x770	12.0	25.0	1220.0	48.0	3.0
SL1-10.6-F1650Z-48	1650.0	600x600	12.0	28.0	1634.4	48.0	3.0
SL1-10.6-F2122Z-48	2128.0	1385x1385	12.0	25.0	2176.0	48.0	3.5

*NOTE: The focus spot size is simulation result; it does not reflect the actual spot size on work piece as the simulation does not consider the material properties and how the laser is absorbed during machining.

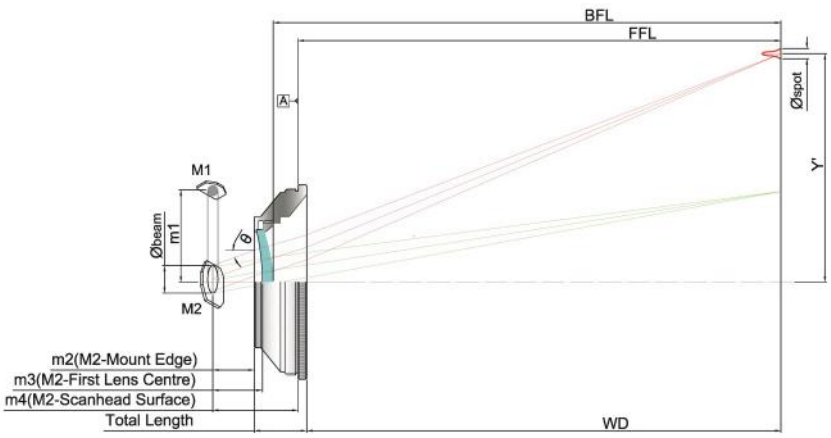

*Part No. for mounted:
SL1-10.6-FxxxZR-xx

SL1 mounted M85x1

SL2 Series - Doublet F-Theta Scan Lens 9.4/10.6um

Doublet F-Theta scanning lenses provide better performance than a singlet. It has more even spot size and less spot distortion over the scan field. We use ZnSe or GaAs for this series of scan lenses. Lens adaptors for major scan head providers are available upon request.

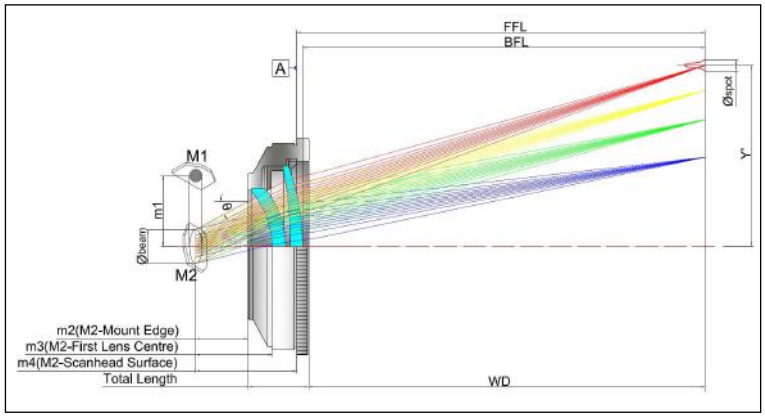

Part No.	EFL (mm)	Scan Field (mm)	Input Beam Φ ($1/e^2$) (mm)	Max. Scan Angle (±deg)	Thread	M1-M2 (mm)	WD (mm)	Wavelength
SL2-9.4-50-100ZW-D20	100.0	50x50	20.0	20.6	M85x1	26.4	131.3	9.4um
SL2-9.4-70-100ZR	100.0	70X70	14.0	28.5	M85x1	20.0	105.6	9.4um
SL2-9.4-140-200ZR	200.0	140x140	15.0	28.0	M85x1	20.0	219.0	9.4um
SL2-9.4-F300ZR-D20	300.0	170X170	20.0	22.9	M85x1	20.0	326.0	9.4um
SL2-9.4-F380Z-D30	380.0	220x220	30.0	23.2	M102x1	36.0	425.8	9.4um
SL2-10.6-35-60GR	60.5	35x35	12.0	25.0	M85x1	17.0	57.8	10.6um
SL2-10.6-50-80GR	80.0	50x50	14.0	25.0	M85x1	20.0	75.7	10.6um
SL2-10.6-70-122GR	122.0	70x70	14.0	23.0	M85x1	20.0	135.9	10.6um
SL2-10.6-110-150ZR	150.0	105x105	14.0	28.0	M85x1	20.0	161.7	10.6um
SL2-10.6-110-170GR	170.0	110x110	10.0	23.0	M85x1	13.0	185.1	10.6um
SL2-10.6-F170ZR-D20	170.0	110x110	20.0	25.0	M85x1	22.8	177.1	10.6um
SL2-10.6-F200ZR	200.0	140x140	14.0	28.8	M85x1	16.0	229.4	10.6um
SL2-10.6-140-220GR	220.0	140x140	14.0	25.0	M85x1	16.0	243.7	10.6um
SL2-10.6-F250ZR	250.0	175x175	14.0	28.4	M85x1	20.0	286.1	10.6um
SL2-10.6-F300ZR-D20	300.0	170x170	20.0	28.0	M85x1	20.0	327.8	10.6um
SL2-10.6-300-420AZR	420.0	300x300	16.0	20.0	M85x1	20.0	466.0	10.6um
SL2-10.6-300-420GR	420.0	300x300	11.8	28.0	M85x1	20.0	463.1	10.6um
SL2-10.6-350-490ZR	490.0	350x350	18.0	27.7	M85x1	25.7	535.2	10.6um
SL2-10.6-F560ZR-D30	560.0	400x400	30.0	24.6	M85x1	25.0	604.8	10.6um
SL2-10.6-F700ZR-D30	700.0	500x500	30.0	19.6	M85x1	30.0	763.7	10.6um

SL3 Series - Triplet F-Theta Scan Lens 9.4/10.6um

SL3 series F-Theta scan lenses consist of three ZnSe elements with or without protective window; they can reduce spot
distortion and achieve more even spot size over the scanning field compared to SL1 and SL2. SL3 is used for finer CO_2 laser applications like electronic micro processing.
Lens adaptors for major scan head providers are available upon request.

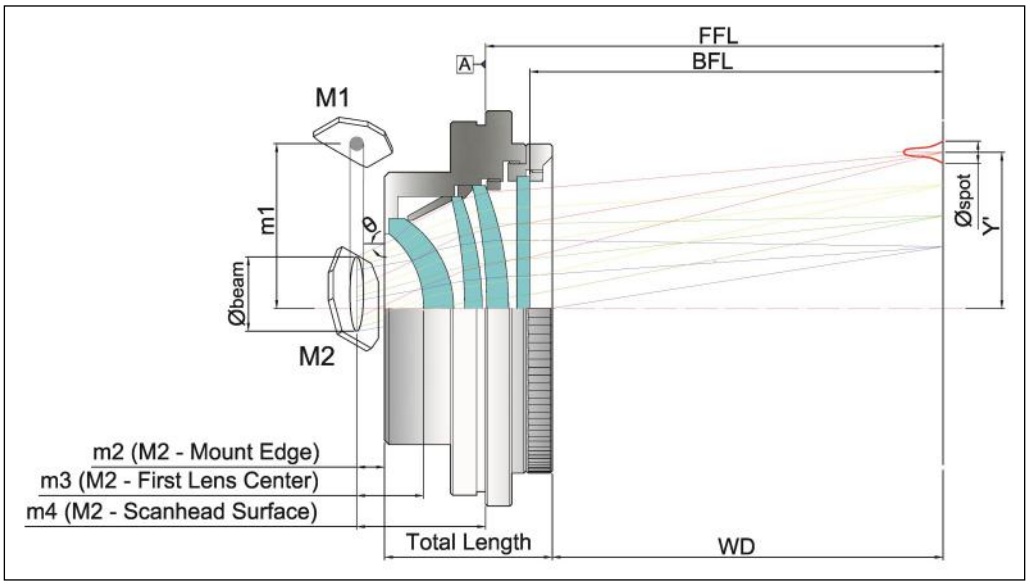

Part No.	EFL (mm)	Scan Field (mm)	Input Beam Φ ($1/e^2$) (mm)	Max. Scan Angle (±deg)	Thread	WD (mm)	Wavelength
SL3-9.4-50-80W	80.0	50x50	14.0	25.0	M85x1	92.0	9.4um
SL3-9.4-60-105Z	105.0	60x60	14.0	23.0	M55x1	130.6	9.4um
SL3-10.6-50-80Z	80.0	50x50	14.0	25.3	M85x1	88.0	10.6um
SL3-10.6-50-100Z	100.0	50x50	25.0	20.6	M85x1	118.6	10.6um

*NOTE: The focus spot size is simulation result; it does not reflect the actual spot size on work piece as the simulation does not consider the material properties and how the laser is absorbed during machining.

CO_2 Laser Beam Expander

Beam expanders developed for CO_2 laser are made by ZnSe material which has the highest transmission for CO_2 laser. We provide a wide range of magnifications from 1x to 20x. With dedicated mechanical structure, the internal lenses don't rotate during adjustment, which ensures the best alignment accuracy. Adjustable ring with scales makes it more convenient for user's operation.

UniBET Series - CO_2 Beam Expander 10.6µm

UniBET series beam expanders are developed for higher power (>100w) CO2 laser without water cool. It has consistent outer dimension and connecting thread M30x1.

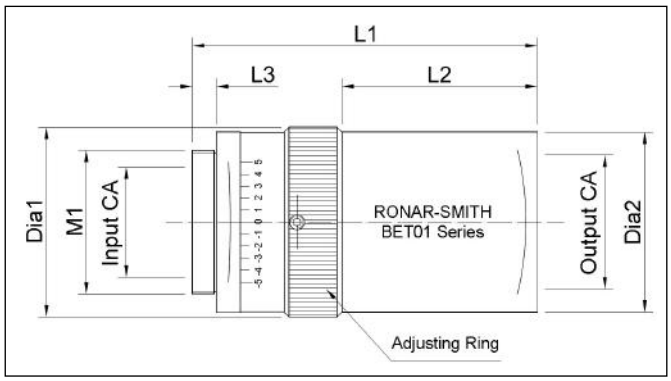

Features
For Collimation of CO_2 Laser >100W
Fixed Magnifications 1.5x - 10x
Galilean Design
Adjustable Divergence

Part No.	Magnification	Input CA (mm)	Output CA (mm)	Outer Dia (mm)	L1 (mm)
BET0101.5	1.5x	20.0	28.0	39.6	75.2
BET0102A	2.0x	20.0	28.0	39.6	75.0
BET0102.5	2.5x	20.0	28.0	39.6	75.6
BET0103A	3.0x	20.0	28.0	39.6	75.0
BET0104A	4.0x	20.0	28.0	39.6	75.0
BET0105A	5.0x	20.0	28.0	39.6	75.0
BET0106A	6.0x	20.0	28.0	39.6	75.0
BET0107A	7.0x	20.0	28.0	39.6	78.5
BET0108A	8.0x	20.0	28.0	39.6	75.0
BET0110A	10.0x	20.0	28.0	39.6	85.0

BET-WC Series—Water Cool Beam Expander

A laser beam expander is designed to increase the diameter of a collimated output beam. It is used in applications such as laser scanning, interferometer and remote sensing. BET-WC Series water cool beam expanders are developed for even higher power (>200W) CO_2 lasers with consistence in outer dimension and water pipe connection.

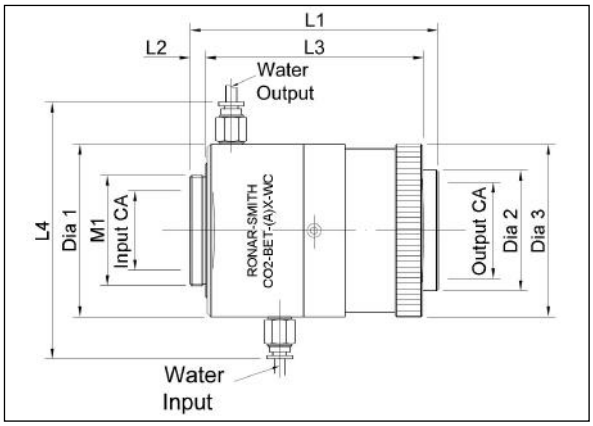

Features
For Collimation of CO_2 Laser >200W
Fixed Magnifications 1.5x - 10x
Galilean Design
Adjustable Divergence

Part No.	Magnification	Input CA (mm)	Output CA (mm)	Outer Dia (mm)	L1 (mm)	M1
BET0101.5-WC	1.5x	23.0	28.0	50.0	72.0	M32x0.75
BET0102A-WC	2.0x	23.0	28.0	50.0	72.0	M32x0.75
BET0102.5-WC	2.5x	23.0	28.0	50.0	72.0	M32x0.75
BET0103A-WC	3.0x	23.0	28.0	50.0	72.0	M32x0.75
BET0104A-WC	4.0x	23.0	28.0	50.0	72.0	M32x0.75
BET0105A-WC	5.0x	23.0	28.0	50.0	72.0	M32x0.75
BET0106A-WC	6.0x	23.0	28.0	50.0	72.0	M32x0.75
BET0107A-WC	7.0x	23.0	28.0	50.0	72.0	M32x0.75
BET0108A-WC	8.0x	23.0	28.0	50.0	72.0	M32x0.75
BET0110A-WC	10.0x	23.0	28.0	50.0	72.0	M32x0.75

BEX Series — Adjustable Beam Expander 9.4µm/ 10.6um

BEX Series beam expanders include a wide range of magnifications from 1x to 20x; the laser divergence can be adjusted by a BEX and it helps to get a collimated output beam to finally achieve finest spot size in different types of CO_2 laser applications.

Features
For Collimation of CO_2 Laser <100W
Fixed Magnifications 2x - 20x
Galilean Design
Adjustable Divergence

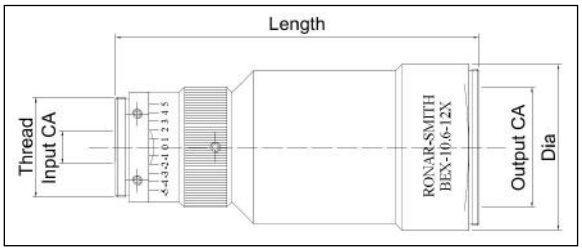

Part No.	Magnification	Input CA (mm)	Output CA (mm)	Thread	Outer Dia (mm)	Length (mm)	Wavelength
BEX-9.4-1X	1.0x	16.0	18.0	M33x0.75	40.0	54.9	9.4µm
BEX-9.4-2X	2.0x	16.5	23.0	M22x0.75	28.0	59.0	9.4µm
BEX-9.4-2.5X	2.5x	13.0	21.0	M22x0.75	28.0	59.0	9.4µm
BEX-9.4-3X1	3.0x	10.0	22.0	M22x0.75	28.0	71.0	9.4µm
BEX-9.4-3X2	3.0x	18.0	30.0	M33x0.75	40.0	69.8	9.4µm
BEX-9.4-4Z1	4.0x	10.0	20.0	M22x0.75	28.0	71.0	9.4µm
BEX-9.4-5Z1	5.0x	13.0	23.0	M22x0.75	30.0	70.0	9.4µm
BEX-10.6-1X	1.0x	16.0	18.0	M33x0.75	40.0	54.9	10.6µm
BEX-10.6-2Z1i	2.0x	10.0	22.0	M22x0.75	32.0	50.0	10.6µm
BEX-10.6-2Z3i	2.0x	15.0	28.0	M22x0.75	36.0	48.1	10.6µm
BEX-10.6-2.5Z2i	2.5x	16.0	21.0	M22x0.75	28.0	57.4	10.6µm
BEX-10.6-3Z2i	3.0x	10.0	20.0	M22x0.75	28.0	61.0	10.6µm
BEX-10.6-3Z5i	3.0x	16.0	36.0	M22x0.75	44.0	75.5	10.6µm
BEX-10.6-3Z6i	3.0x	15.5	28.0	M22x0.75	36.0	60.0	10.6µm
BEX-10.6-3.5Z	3.5x	10.5	16.0	M16x0.75	20.0	27.9	10.6µm
BEX-10.6-4Z1i	4.0x	10.0	20.0	M22x0.75	28.0	71.0	10.6µm
BEX-10.6-4Z2i	4.0x	15.0	28.0	M22x0.75	36.0	67.3	10.6µm
BEX-10.6-5Z1i	5.0x	13.0	23.0	M22x0.75	30.0	70.0	10.6µm
BEX-10.6-6Zi	6.0x	11.0	26.0	M22x0.75	32.0	76.0	10.6µm
BEX-10.6-6Z1i	6.0x	11.0	36.0	M22x0.75	44.0	75.0	10.6µm
BEX-10.6-8Z1	8.0x	13.0	33.0	M22x0.75	44.0	121.7	10.6µm
BEX-10.6-8Z2	8.0x	10.5	23.4	M22x0.75	30.0	64.8	10.6µm
BEX-10.6-10Z1i	10.0x	10.0	36.0	M22x0.75	44.0	125.0	10.6µm
BEX-10.6-12x	12.0x	10.0	36.0	M30x1	50.0	109.2	10.6µm
BEX-10.6-15x	15.0x	10.0	40.0	M30x1	53.0	118.4	10.6µm
BEX-10.6-20x	20.0x	9.0	52.0	M30x1	65.0	144.0	10.6µm

MiniBET Series - CO_2 Beam Expander 10.6µm

MiniBET series have the same external diameter of 20mm, thread M16x0.75 and it is widely applied in compact CO_2 laser system.

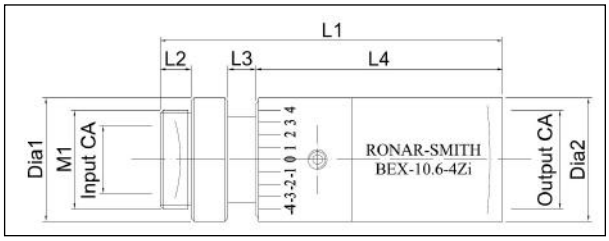

Features
For Collimation of CO_2 Laser <100W
Fixed Magnifications 1.5x - 6x
Galilean Design
Adjustable Divergence

Part No.	Magnification	Input CA (mm)	Output CA (mm)	Outer Dia (mm)	Length (mm)
BEX-10.6-1.5Z	1.5x	12.0	14.0	20.0	44.1
BEX-10.6-2Z4	2.0x	10.0	15.0	20.0	51.0
BEX-10.6-2.5Z	2.5x	10.0	15.0	20.0	56.0
BEX-10.6-2.5Z1	2.5x	10.0	16.0	20.0	32.5
BEX-10.6-3Z1	3.0x	10.0	16.0	20.0	61.0
BEX-10.6-3.3Z1	3.3x	10.0	15.0	20.0	69.0
BEX-10.6-3Z3T	3.0x	10.0	16.0	20.0	37.0
BEX-10.6-3.5Z	3.5x	10.5	16.0	20.0	27.9
BEX-10.6-4Z	4.0x	8.0	15.0	20.0	57.0
BEX-10.6-5Z	5.0x	10.0	16.0	20.0	58.0
BEX-10.6-6Z2	6.0x	10.0	15.0	20.0	60.0

BXZ- MOT Series- Motorized Zoom Expander 9.4 /10.6µm

Motorized Zoom beam expanders can be used either to increase or decrease the laser beam diameter. The lens group will move automatically to their calculated positions by electronic and software control. It has short set-up time and allows quick and precise change of laser beam parameters in on-going production. Meanwhile it has high pointing stability.

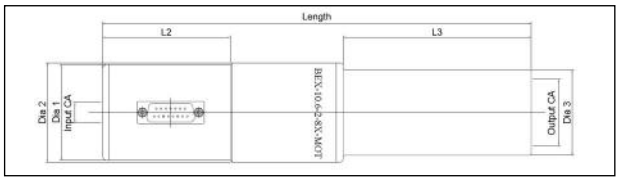

Specifications	
Magnification	Continuous zoom
Fast Adjustment between Each Magnification	5 Second
Baud Rate	9600 bit/sec
Power Input	9V
Interface	RS232 or USB
Pointing Error	< 1 mrad

Part No.	Magnification	Max. Input Beam Φ (1/e2) (mm)		Input CA (mm)	Output CA (mm)	Length (mm)	Wavelength	Type
BXZ-9.4-0.25-2X-MOT	0.25x-2x	10@0.5x	10@2x	10.0	30.0	139.0	9.4µm	Motorized
BXZ-9.4-2-8X-MOT	2x-8x	6@2x	3@8x	10.0	36.0	190.0	9.4µm	Motorized
BXZ-10.6-1-3X-MOT	1x-3x	8@1x	6@3x	16.0	38.0	199.0	10.6µm	Motorized
BXZ-10.6-1-4X-MOT	1x-4x	10@1x	8@4x	16.0	47.0	189.0	10.6µm	Motorized
BXZ-10.6-2-6X-MOT	2x-6x	3.5@2x	3@6x	18.0	28.0	213.0	10.6µm	Motorized
BXZ-10.6-2-8X-MOT	2x-8x	5@2x	3@8x	10.0	30.0	190.0	10.6µm	Motorized

BXZ Series—Zoom Beam Expander 9.4μm / 10.6μm

BXZ Series zoom expanders are developed to expand laser beams with variable magnifications.

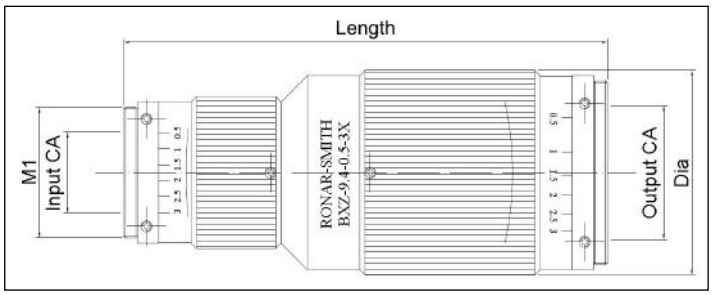

Features
Colimation of CO_2 laser
Continuous zoom magnification
Pointing stability < 1 mrad
Manual operation

Part No.	Magnification	Max. Input Beam Φ (1/e2) (mm)		Input CA (mm)	Output CA (mm)	Length (mm)	Wavelength	Type
BXZ-9.4-0.25-2X	0.25x-2x	10@0.5x	10@2x	27.0	38.0	119.9	9.4μm	Manual
BXZ-9.4-0.3-1X	0.3x-1x	9@0.3x	10@1x	14.0	14.0	82.3	9.4μm	Manual
BXZ-9.4-0.5-3X	0.5x-3x	10@0.5x	8@3x	23.0	38.0	138.0	9.4um	Manual
BXZ-9.4-1-3X	1x-3x	9@1x	6@3x	18.0	30.0	126.4	9.4um	Manual
BXZ-9.4-1-4X	1x-4x	10@1x	8@4x	18.0	48.0	140.9	9.4μm	Manual
BXZ-9.4-2-8X	2x-8x	6@2x	3@8x	10.0	36.0	172.0	9.4μm	Manual
BXZ-9.4-0.5-3X-G8	0.5x-3x	8@0.5x	5@3x	20.0	58.0	383.0	9.4μm	Galilean
BXZ-9.4-1-4X-G7	1x-4x	7@1x	3@4x	15.0	49.0	252.0	9.4μm	Galilean
BXZ-10.6-0.5-3X	0.5x-3x	10@0.5x	8@3x	23.0	38.0	138.0	10.6μm	Manual
BXZ-10.6-1-3X	1x-3x	9@1x	6@3x	18.0	30.0	126.4	10.6μm	Manual
BXZ-10.6-1-4X	1x-4x	10@1x	8@4x	18.0	48.0	133.9	10.6μm	Manual
BXZ-10.6-2-6X-A	2x-6x	3.5@2x	3@6x	18.0	28.0	213.0	10.6μm	Manual
BXZ-10.6-2-8X	2x-8x	5@2x	3@8x	10.0	36.0	182.0	10.6μm	Manual
BXZ-10.6-1-4X-G	1x-4x	6@1x	4@4x	18.0	28.0	150.0	10.6μm	Galilean
BXZ-10.6-1.5-3X-G9	1.5x-3x	7@1.5x	9@3x	18.0	38.0	114.5	10.6μm	Galilean

4-axis Stage: M68

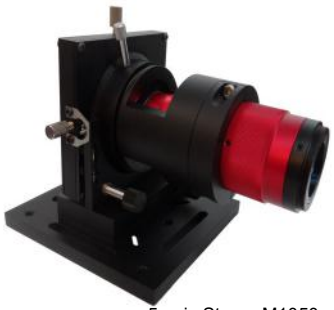

5-axis Stage: M1050

NOTE: Mounting stages for BXZ easy holding and adjustment are available for your choice.

ZnSe Focusing Lens

Focusing lenses are used to focus laser beam. The objective of focusing the laser beam is to concentrate the laser power for material processing. ZnSe Lenses are widely used for CO_2 laser applications because of its low absorption at infrared wavelengths as well as its visible transmission.

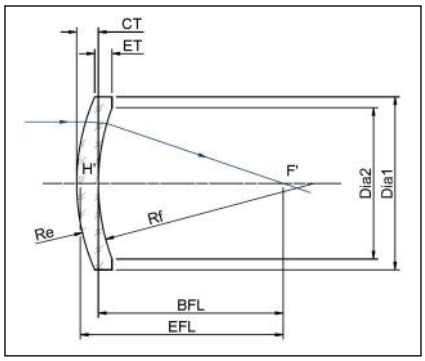

Specifications	
Diameter Tolerance	+0/-0.13mm
Thickness Tolerance	±0.25mm
Focal Length Tolerance	±2%
Edge Thickness Variation (ETV)	≤3 arc min.
Clear Aperture	>90%
Surface Flatness	λ/4 per 1″Dia@632.8nm
Surface Quality	40-20 S-D
AR Coating	R<0.2% per surface @10.6μm

LZM Series - ZnSe Positive Meniscus Lens

Positive meniscus lenses are designed to minimize spherical aberration, and produce minimum focal spot size for incoming collimated light.

Part No.	Dia (mm)	EFL (mm)	BFL (mm)	ET (mm)
LZM-0.6-2-ET2	15.2	50.8	49.2	2.0
LZM-0.75-1.5-ET2	19.1	38.1	38.0	2.0
LZM-0.75-2-ET2	19.1	50.8	49.0	2.0
LZM-0.75-2.5-ET2	19.1	63.5	64.0	2.0
LZM-0.75-3-ET2	19.1	76.2	61.9	2.0
LZM-0.75-3-ET3	19.1	76.2	73.9	3.0
LZM-0.75-3.5-ET2	19.1	88.9	90.0	2.0
LZM-0.75-5-ET3	19.1	127.0	124.8	3.0
LZM-1-2-ET3	25.4	50.8	51.0	3.0
LZM-1-2.5-ET2	25.4	63.5	61.5	2.0
LZM-1-2.5-ET3	25.4	63.5	51.0	3.0
LZM-1-3-ET2	25.4	76.2	76.0	2.0
LZM-1-3-ET3	25.4	76.2	76.2	3.0
LZM-1-3.75-ET3	25.4	96.5	96.0	3.0
LZM-1-4-ET3	25.4	101.6	102.0	3.0
LZM-1-5-ET3	25.4	127.0	128.0	3.0
LZM-1-6-ET3	25.4	152.4	153.0	3.0
LZM-1-7.5-ET3	25.4	190.5	188.3	3.0
LZM-1-8-ET3	25.4	203.2	201.0	3.0
LZM-1.1-1.5-ET2	27.9	38.1	35.4	2.0
LZM-1.1-2.5-ET3	27.9	63.5	61.0	3.0

Part No.	Dia (mm)	EFL (mm)	BFL (mm)	ET (mm)
LZM-1.1-3-ET3	27.9	76.2	73.6	3.0
LZM-1.1-3.5-ET3	27.9	88.9	86.2	3.0
LZM-1.1-5-ET6	27.9	127.0	122.7	6.0
LZM-30-100.7-ET5.2	30.0	100.7	96.7	5.2
LZM-1.5-2.5-ET3	38.1	63.5	47.0	3.0
LZM-1.5-3-ET3	38.1	76.2	73.0	3.0
LZM-1.5-4-ET3	38.1	101.6	98.7	3.0
LZM-1.5-5-ET3	38.1	127.0	125.0	3.0
LZM-2-150-ET3	50.8	150.0	147.0	3.0
LZM-2-700-ET3	50.8	700.0	698.3	3.0

LZ Series - ZnSe Plano-Convex Lens

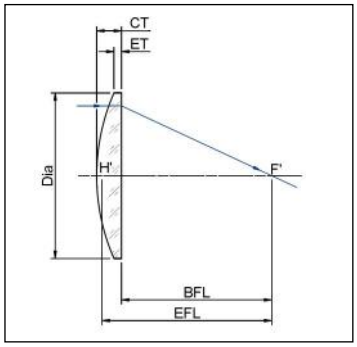

Specifications	
Diameter Tolerance	+0/-0.13mm
Thickness Tolerance	±0.25mm
Focal Length Tolerance	±2%
Edge Thickness Variation (ETV)	⩽3 arc min.
Clear Aperture	>90%
Surface Flatness	λ/4 per 1″Dia@632.8nm
Surface Quality	40-20 S-D
AR Coating	R<0.2% per surface @10.6μm

Part No.	Dia (mm)	EFL (mm)	ET (mm)
LZ-0.5-1.5-ET2	12.7	38.1	2.0
LZ-0.6-1.5-ET1.5	15.2	38.1	1.5
LZ-0.6-1.5-ET2	15.2	38.1	2.0
LZ-0.6-2-ET2	15.2	50.8	2.0
LZ-0.6-2.5-ET2	15.2	63.5	2.0
LZ-0.6-4-ET2	15.2	101.6	2.0
LZ-0.75-1-ET2	19.0	25.4	2.0
LZ-0.75-1.5-ET2	19.0	38.1	2.0
LZ-0.75-2-ET2	19.0	50.8	2.0
LZ-0.75-2.5-ET2	19.0	63.5	2.0
LZ-0.75-3-ET2	19.0	76.2	2.0
LZ-0.75-4-ET2	19.0	101.6	2.0
LZ-0.75-5-ET2	19.0	127.0	2.0
LZ-0.75-12-ET2	19.0	304.8	2.0
LZ-20-47-ET2	20.0	47.0	2.0

Part No.	Dia (mm)	EFL (mm)	ET (mm)
LZ-20-72-ET3	20.0	72.0	3.0
LZ-25-3-ET2	25.0	76.2	2.0
LZ-1-30-ET3	25.4	30.0	3.0
LZ-1-1.5-ET3	25.4	38.1	3.0
LZ-1-2-ET2	25.4	50.8	2.0

LZ Series - ZnSe Plano-Concave Lens

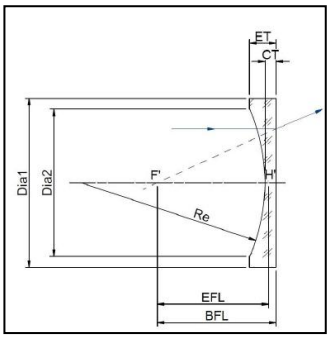

Specifications	
Diameter Tolerance	+0/-0.13mm
Thickness Tolerance	±0.25mm
Focal Length Tolerance	±2%
Edge Thickness Variation (ETV)	⩽3 arc min.
Clear Aperture	>90%
Surface Flatness	λ/4 per 1″Dia@632.8nm
Surface Quality	40-20 S-D
AR Coating	R<0.2% per surface @10.6μm

Part No.	Dia (mm)	EFL (mm)	ET (mm)
LZ-10+1.4-ET1.2	10.0	-35.56	1.2
LZ-12.5+0.5-ET3	12.5	-12.7	3.0
LZ-12.5+0.6-ET2	12.5	-15.2	2.0
LZ-12.5+0.75-ET2	12.5	-19.0	2.1
LZ-12.5+0.75-ET3.3	12.5	-19.0	3.3
LZ-12.5+1-ET2.3	12.5	-25.4	2.3
LZ-0.5+14.4-ET3	12.7	-14.4	3.0
LZ-0.5+32.08-ET2.2	12.7	-32.1	2.2
LZ-0.5+1.5-ET3	12.7	-38.1	3.0
LZ-15+0.75-ET3.1	15.0	-19.0	3.1
LZ-15+25-ET3.3	15.0	-25.0	3.3
LZ-0.75+1-ET3	19.1	-25.4	3.0
LZ-0.75+30-ET3	19.1	-30.0	3.0
LZ-0.75+1.5-ET3	19.1	-38.1	3.0
LZ-0.75+2-ET3	19.1	-50.8	3.0
LZ-20+712-ET3	20.0	-712.0	3.0
LZ-25+1.5-ET4	25.0	-38.1	4.0
LZ-25+56-ET3.6	25.0	-56.0	3.6
LZ-25+37.46-ET3.3	25.0	-37.4	3.3
LZ-1+2.5-ET3	25.4	-63.5	3.0

ZnSe Cylindrical Lens

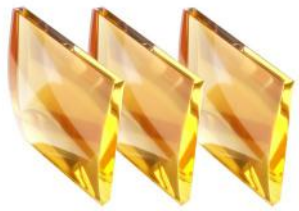

Cylindrical lenses are either round or rectangular objects with cylindrically shaped surfaces. They differ from spherical lenses in that they focus a beam to a focal line rather than a focal point. Its applications include laser scanners, laser diode systems, spectrophotometers, projectors and optical data storage and retrieval systems.

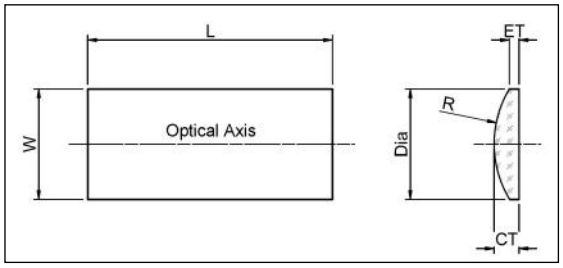

Specifications	
Dimension Tolerance	+0/-0.13mm
Thickness Tolerance	±0.25mm
Focal Length Tolerance	±2%
Edge Thickness Variation (ETV)	≤3 arc min.
Clear Aperture	>90%
Surface Flatness	λ/4 per 1″Dia@632.8nm
Surface Quality	60-40 S-D
AR Coating	R<0.2% per surface @10.6μm

LZCY Series - ZnSe Plano-Convex Cylindrical Lens

Part No.	L x W (mm)	EFL (mm) @ 10.6um	R (mm)	CT (mm)
LZCY-25x25-25	25.4x25.4	25.4	35.56	5.0
LZCY-25x25-38	25.4x25.4	38.1	53.34	5.0
LZCY-25x25-50	25.4x25.4	50.8	71.12	5.0
LZCY-25x25-63	25.4x25.4	63.5	88.9	5.0
LZCY-25x25-76	25.4x25.4	76.2	106.7	5.0
LZCY-25x25-101	25.4x25.4	101.6	142.2	5.0
LZCY-25x25-127	25.4x25.4	127.0	177.8	5.0
LZCY-25x25-190	25.4x25.4	190.5	266.7	5.0
LZCY-25x25-254	25.4x25.4	254.0	355.6	5.0
LZCY-25x25-381	25.4x25.4	381.0	533.4	5.0
LZCY-50x50-5	50.8x50.8	127.0	178.0	6.5
LZCY-50x50-10	50.8x50.8	254.0	356.0	6.5

LZCY Series - ZnSe Plano-Concave Cylindrical Lens

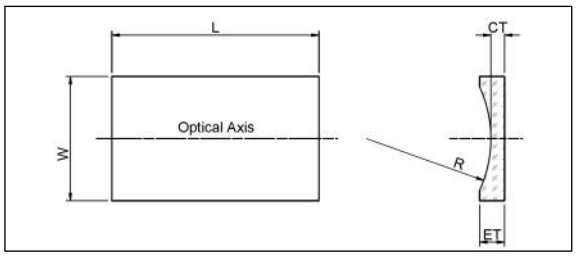

Part No.	L x W (mm)	EFL (mm)@10.6um	R (mm)	CT (mm)
LZCY-25x25+38.1	25.4x25.4	-38.1	-53.45	4.0
LZCY-25x25+72.4	25.4x25.4	-72.4	-101.56	2.5
LZCY-25x25+254	25.4x25.4	-254.0	-355.9	3.0

ZnSe Axicon Lens

Axicon lenses have one conical surface, and are used to produce a ring focus. Typically, axicon lenses have a second flat surface and are used in combination with a focusing lens.

Axicon lenses are made from laser grade ZnSe using a manufacturing process suited to the axicon angle and the accuracy required. For small angle, high accuracy lenses, the manufacturing process involves diamond-machining.

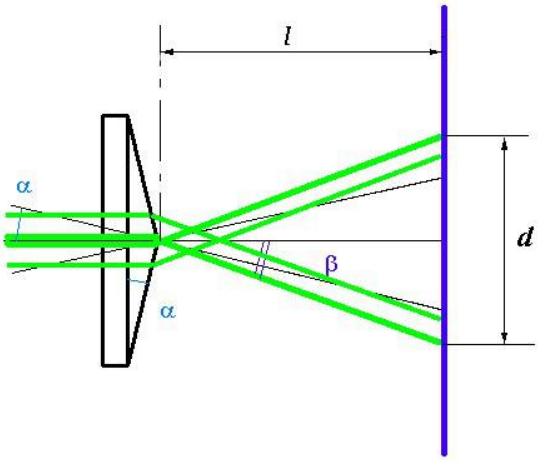

d=2xl（n-1）α　　d is the ring size

Standard Axicon lens
Axicon cone angle equal to 180°-2α

Cone angle (°)	α (°)
140	20
160	10
165	7.5
170	5
175	2.5
178	1
179.5	0.25 = 15'

Part No.	Diameter (mm)	Cone Angle (°)	ET (mm)	Material
LZAX-1-ET3-140DEG	25.4	140	3	ZnSe
LZAX-1-ET3-160DEG	25.4	160	3	ZnSe
LZAX-1-ET3-170DEG	25.4	170	3	ZnSe
LZAX-1-ET3-175DEG	25.4	175	3	ZnSe
LZAX-1-ET3-178DEG	25.4	178	3	ZnSe
LZAX-1-ET3-179.5DEG	25.4	179.5	3	ZnSe

Reflecting Mirror

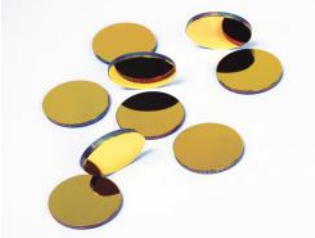

Reflecting mirrors are used either within a laser cavity as rear or folding mirrors, or external to the laser as bending mirrors to deliver the beam to the work.

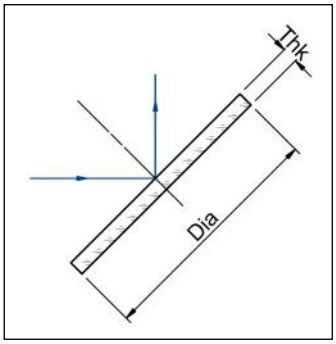

Specifications	
Diameter Tolerance	+0/-0.13mm
Thickness Tolerance	±0.25mm
Parallelism	≤3 arc min.
Clear Aperture	>90%
Surface Flatness	λ/4 per 1″Dia @632.8nm
Surface Quality	40-20 S-D
Angle of Incidence	45°

RSI / RMO Series—Si/Mo Mirror

Part No.	Dia (mm)	Thk (mm)	Material	Wavelength (Remarks)
RSI-12-1.5	12.0	1.5	Silicon	HR@10.6μm
RSI-15-4	15.0	4.0	Silicon	HR@10.6μm
RSI-19-3E	19.0	3.0	Silicon	HR@10.6μm
RSI-0.75-3	19.1	3.0	Silicon	HR@10.6μm
RSI-1-3	25.4	3.0	Silicon	HR@10.6μm
RSI-1-3DBR	25.4	3.0	Silicon	HR@10.6μm/650nm
RSI-1.1-3	27.9	3.0	Silicon	HR@10.6μm
RSI-1.5-4	38.1	4.0	Silicon	HR@10.6μm
RSI-1.5-9.6	38.1	9.7	Silicon	HR@10.6μm
RSI-2-5	50.8	5.1	Silicon	HR@10.6μm
RSI-2-9.5	50.8	9.5	Silicon	HR@10.6μm
RMO-0.75-3	19.0	3.0	Molybdenum	Polished surface
RMO-1-3	25.4	3.0	Molybdenum	Polished surface

0RSI/0RCU Series— Zero Phase Retarder

Reflective Phase Retarders are used as beam bending mirrors external to the laser cavity to establish and maintain circular polarization. This requirement is particularly vital for laser material processing applications where cut or scribed edge quality, and weld penetration, are critical to the consistency and precision of the final part. Zero degree phase retarders maintain control over the circularly polarized beam.

Part No.	Dia (mm)	Thk (mm)	Type
0RSI-25-3	25.0	3.0	Si Zero Phase Retarder
0RSI-1-3	25.4	3.0	Si Zero Phase Reflector
0RSI-1.5-4	38.1	4.0	Si Zero Phase Reflector
0RSI-1.5-5	38.1	5.0	Si Zero Phase Reflector
0RSI-2-5	50.8	5.0	Si Zero Phase Reflector
0RSI-2-9.5	50.8	9.5	Si Zero Phase Reflector
0RCU-38-10	38.0	10.0	Cu Zero Phase Retarder
0RCU-50-10	50.0	10.0	Cu Zero Phase Retarder
0RCU-60-10	60.0	10.0	Cu Zero Phase Retarder

90RSI Series— 90˚ Phase Retarder

90˚ phase retarders are used to convert linear polarization to circular polarization. Circular polarization means equal amount of s-pol and p-pol for any beam orientation. With 90˚ phase retarders used in cutting, material can be removed uniformly regardless of cutting directions.

Part No.	Dia (mm)	Thk (mm)	Type
90RSI-1-3	25.4	3.0	Si 90˚ Phase Retarder
90RSI-1.5-4	38.1	4.0	Si 90˚ Phase Reflector
90RSI-2-5	50.8	5.0	Si 90˚ Phase Reflector

ZnSe Thin Film Polarizer

Thin Film Polarizer (TFP) is used to split a laser beam into two parts with S and P Polarizations. Meanwhile, TFP can also be used to combine two beams with S and P polarizations. A TFP consists of a coated plate, which is oriented at Brewster's angle with respect to the incoming beam. The thin film coating is able to enhance the reflectivity of the s-polarized component of the beam, and maintain high transmission of the p-polarized component.

Specifications	
Material	ZnSe
Surface Flatness	λ/4 per 1"Dia@632.8nm
Surface Quality	40-20 S-D
Coating	Tp =97%+/-0.5%@10.6um
	Rs =97%+/-0.5%@10.6um
Angle of Incidence	67.3˚ (brewster angle@10.6um)

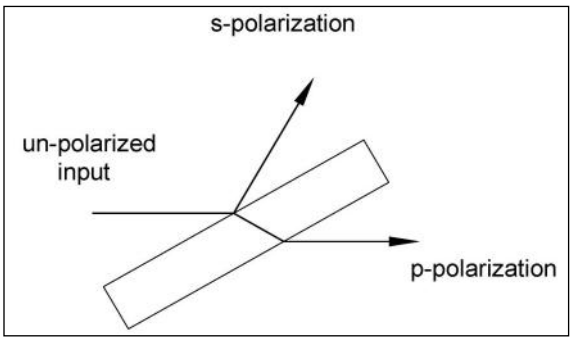

Part No.	Dimensio (mm)	Thickness (mm)	Material
TFP-Z-19x38x3M	19x38	3	ZnSe
TFP-Z-25X64X3M	25x64	3	ZnSe

ZnSe Protective Window

ZnSe is commonly used in thermal resistance applications. ZnSe has wide usage in high power CO_2 laser systems.

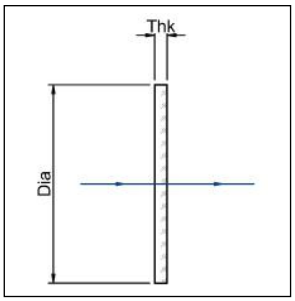

Specifications	
Diameter Tolerance	+0/-0.13mm
Thickness Tolerance	±0.25mm
Parallelism	⩽3 arc min.
Clear Aperture	>90%
Surface Flatness	λ/4 per 1″Dia @632.8nm
Surface Quality	40-20 S-D
Angle of Incidence	45°

WZ Series—ZnSe window

Part No.	Dia (mm)	Thk (mm)	Material	Wavelength
WZ-0.5-2	12.7	2.0	ZnSe	10.6μm
WZ-18-2	18.0	2.0	ZnSe	10.6μm
WZ-0.75-3	19.1	3.0	ZnSe	10.6μm
WZ-1-3	25.4	3.0	ZnSe	10.6μm
WZ-1.1-3	27.9	3.0	ZnSe	10.6μm
WZ-1.5-3	38.1	3.0	ZnSe	10.6μm
WZ-50-3	50.0	3.0	ZnSe	10.6μm
WZ-50-4	50.0	4.0	ZnSe	10.6μm
WZ-2-5	50.8	5.0	ZnSe	10.6μm
WZ-55-3	55.0	3.0	ZnSe	10.6μm
WZ-60-3	60.0	3.0	ZnSe	10.6μm
WZ-75-3	75.0	3.0	ZnSe	10.6μm
WZ-80-3	80.0	3.0	ZnSe	10.6μm
WZ-88-3	88.0	3.0	ZnSe	10.6μm
WZ-90-3	90.0	3.0	ZnSe	10.6μm
WZ-110-5	110.0	5.0	ZnSe	10.6μm
WZ-180-6	180.0	6.0	ZnSe	10.6μm

Rectangular ZnSe Window

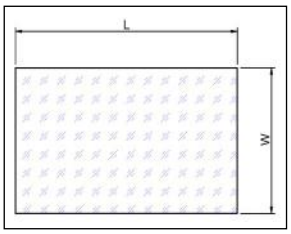

Specifications	
Dimension Tolerance	+0/-0.13mm
Thickness Tolerance	±0.25mm
Parallelism	⩽3 arc min.
Clear Aperture	>90%
Surface Flatness	λ/4 per 1″Dia@632.8nm
Surface Quality	60-40 S-D
AR Coating	R<0.2% per surface @10.6μm

Part No.	L x W (mm)	Thk (mm)	Material	Wavelength
WZ-15x18x1	15x18	1.0	ZnSe	10.6μm
WZ-31.75x31.75x4	31.75x31.75	4.0	ZnSe	10.6μm
WZ-50x80x3	50x80	3.0	ZnSe	10.6μm
WZ-65x85x3	65x85	3.0	ZnSe	10.6μm
WZ-90x60x3	90x60	3.0	ZnSe	10.6μm
WZ-95x95x3	95x95	3.0	ZnSe	10.6μm
WZ-150x105x3	150x105	3.0	ZnSe	10.6μm
WZ-150x105x6	150x105	6.0	ZnSe	10.6μm
WZ-185x125x6	185x125	6.0	ZnSe	10.6μm

ZnSe Beam Combiner

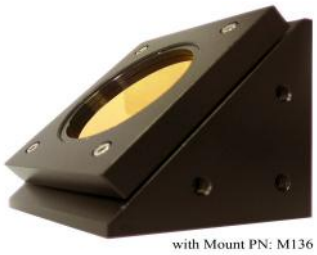
with Mount PN: M136

ZnSe Beam Combiner is used for CO_2 laser system alignment. Designed at 45˚ angle of incidence, it transmits CO_2 laser beam and combines the beam with the 90˚ reflected visible alignment beam.

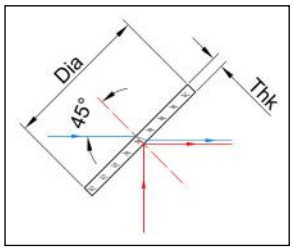

Specifications	
Diameter Tolerance	+0/-0.13mm
Thickness	±0.25mm
Surface Flatness	λ/4 per 1″Dia@632.8nm
Surface Quality	40-20 S-D
AOI	45°

BCZ Series - ZnSe Beam Combiner

Part No.	Dia (mm)	Thk (mm)	Material	Wavelength
BCZ-0.5-3	12.7	3.0	ZnSe	10.6μmT/650nmR
BCZ-0.75-3	19.1	3.0	ZnSe	10.6μmT/650nmR
BCZ-20-2	20.0	2.0	ZnSe	10.6μmT/650nmR
BCZ-1.5-3	38.1	3.0	ZnSe	10.6umT/650nmR
BCZ-2-5	50.8	5.0	ZnSe	10.6μmT/650nmR

ZnSe Beam Splitter 9.4μm/10.6μm

A common Beam Splitter is used to split or combine laser beams. While Polarization Beam Splitters are used to split or combine two perpendicular polarization laser beams. The performance of beam splitters is mainly dependent on the coating specifications.

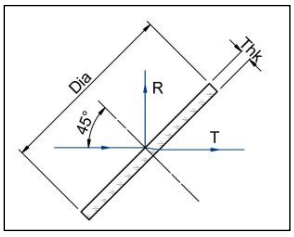

Specifications	
Diameter Tolerance	+0/-0.13mm
Thickness	±0.25mm
Surface Flatness	λ/4 per 1″Dia@632.8nm
Surface Quality	60-40 S-D
AOI	45°

BSZ Series - ZnSe Beam Splitter

Part No.	Dia (mm)	Thk (mm)	Side 1 Reflectivity (%R)	Polarization	Wavelength
BSZ-0.5-3-10%R-PIS	12.7	3.0	10%	Insensitive	10.6um
BSZ-1-3-27%R-PIS	25.4	3.0	27%	Insensitive	10.6μm
BSZ-1-3-50%R-PIS	25.4	3.0	50%	Insensitive	10.6μm
BSZ-1.5-3-50%R-PIS	25.4	3.0	50%	Insensitive	10.6μm
BSZ-2-5-50%R-PIS	27.9	3.0	50%	Insensitive	10.6μm
BSZ-1-3-50%R-9.4PIS	25.4	3.0	50%	Insensitive	9.4μm
BSZ-1.5-3-50%R-9.4PIS	38.1	3.0	50%	Insensitive	9.4μm
BSZ-2-5-50%R-9.4PIS	50.8	5.0	50%	Insensitive	9.4μm

High Power CO_2 Laser Optics

ZnSe is the typical material for high power CO_2 laser optics for its low absorption coefficient in infrared wavelengths and its visible transmission. High transmission and ultra low absorption coating is added to further reduce surface reflection and absorption of laser power. It is widely used for CO_2 laser cutting, welding and laser heat treatment.

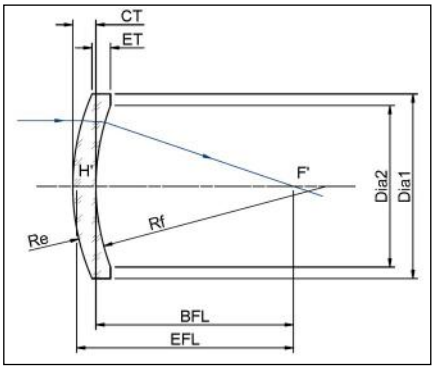

Specifications	
Diameter Tolerance	+0/-0.13mm
Thickness Tolerance	±0.25mm
Focal Length Tolerance	±2%
Edge Thickness Variation (ETV)	≤3 arc min.
Clear Aperture	>90%
Surface Flatness	λ/4 per 1″Dia@632.8nm
Surface Quality	20-10 S-D
AR Coating	R<0.15% per surface @10.6μm

LZM Series - ZnSe Focusing Lens 10.6μm

Part No.	Dia1 (mm)	EFL (mm)	ET (mm)	Type
LZM-1-5-ET2.5	25.4	127.0	2.5	Meniscus
LZM-1.1-1.5-ET5	27.9	38.1	5.0	Meniscus
LZM-1.1-2.5-ET3	27.9	63.5	3.0	Meniscus
LZM-1.1-3.75-ET2	27.9	95.2	2.0	Meniscus
LZM-1.1-5-ET2.7	27.9	127.0	2.7	Meniscus
LZM-1.1-7.5-ET6	27.9	190.5	6.0	Meniscus
LZM-1.5-2.5-ET3	38.1	63.5	3.0	Meniscus
LZM-1.5-3.75-ET6	38.1	96.5	6.0	Meniscus
LZM-1.5-5-ET3	38.1	127.0	3.0	Meniscus
LZM-1.5-7.5-ET3	38.1	190.5	3.0	Meniscus
LZM-1.5-10-ET9	38.1	254.0	9.0	Meniscus
LZM-2-3.75-ET9.6	50.8	96.5	9.6	Meniscus
LZM-2-5-ET8	50.8	127.0	8.0	Meniscus
LZM-2-7.5-ET3.5	50.8	190.5	3.5	Meniscus
LZM-2-10-ET9.6	50.8	254.0	9.6	Meniscus
LZM-2-12.5-ET9.65	50.8	317.5	9.7	Meniscus
LZM-2.5-7.5-ET11	63.5	190.5	11.0	Meniscus

LZ Series - ZnSe Focusing Lens 10.6μm

LZ series ZnSe Plano-Convex lenses have a positive focal length, they are used to focus a collimated beam to a small spot size, the curved surface will be faced to the input beam to minimize spherical aberration.

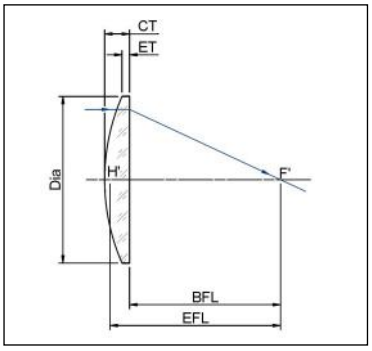

Specifications	
Diameter Tolerance	+0/-0.13mm
Thickness Tolerance	±0.25mm
Focal Length Tolerance	±2%
Edge Thickness Variation (ETV)	≤3 arc min.
Clear Aperture	>90%
Surface Flatness	λ/4 per 1″Dia@632.8nm
Surface Quality	20-10 S-D
AR Coating	R<0.15% per surface @10.6μm

Part No.	Dia (mm)	EFL (mm)	ET (mm)	Type
LZ-1-1.5-ET3	25.4	38.1	3.0	PO/CX
LZ-1-2-ET3	25.4	50.8	3.0	PO/CX
LZ-1-2.5-ET3	25.4	63.5	3.0	PO/CX
LZ-1-3-ET3	25.4	76.2	3.0	PO/CX
LZ-1-4-ET3	25.4	101.6	3.0	PO/CX
LZ-1-5-ET3	25.4	127.0	3.0	PO/CX
LZ-1-10-ET3	25.4	254.0	3.0	PO/CX
LZ-1-12.5-ET4.8	25.4	317.5	4.8	PO/CX
LZ-1-15-ET4.8	25.4	381.0	4.8	PO/CX
LZ-1.1-5-ET3	27.9	127.0	3.0	PO/CX
LZ-1.1-7.5-ET4	27.9	190.5	4.0	PO/CX
LZ-1.5-2.5-ET7.4	38.1	63.5	7.4	PO/CX
LZ-1.5-3.5-ET3	38.1	88.9	3.0	PO/CX
LZ-1.5-3.75-ET3	38.1	96.5	3.0	PO/CX
LZ-1.5-5-ET4	38.1	127.0	4.0	PO/CX
LZ-1.5-7.5-ET4	38.1	190.5	4.0	PO/CX
LZ-1.5-15-ET8	38.1	381.0	8.0	PO/CX
LZ-2-5-ET8	50.8	127.0	8.0	PO/CX
LZ-2-7.5-ET8	50.8	190.5	8.0	PO/CX
LZ-2-8.75-ET7.8	50.8	223.5	7.8	PO/CX
LZ-2-8.75-ET8.5	50.8	223.5	8.5	PO/CX
LZ-2-10-ET7.9	50.8	254.0	7.9	PO/CX
LZ-2.5-8.75-ET9.7	63.5	223.5	9.7	PO/CX
LZ-2.5-10-ET9.9	63.5	254.0	9.9	PO/CX

10.6um CO_2 Laser Cavity Optics

CO_2 Laser cavity optics consist of Rear mirror and Front mirror (also called Output coupler or Partial reflector). Rear Mirrors, typically Ge or ZnSe, with very high reflectivity (>99.7%) are key optical components in laser resonator. Output Couplers are partially reflective mirrors to extract a portion of the laser beam from the laser resonator. They often require a slight wedge to prevent interference from multiple reflections inside the component.

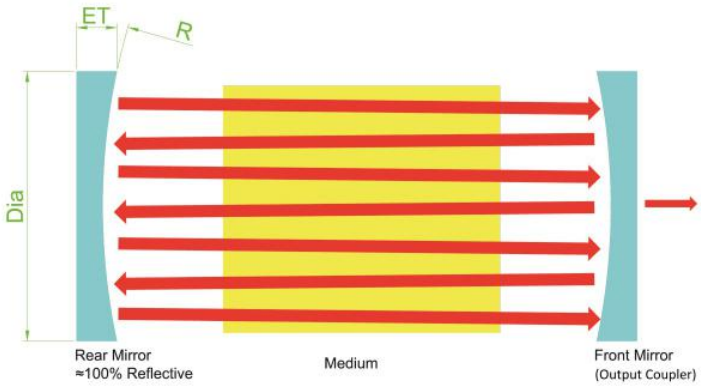

Specifications	
Diameter Tolerance	+0/-0.13mm
Thickness Tolerence	±0.25mm
Centration	< 3 arc minutes
Clear Aperture	>90%
Surface Quality	40-20 S-D
Angle of Incidence	0 degrees

Part No.	Dia (mm)	Thickness (mm)	Radius	Reflectivity (%)	Remarks
RSI-1-4.5-3MCC	25.4	4.5	3M Concave	>99.7%	Rear Mirror
RSI-1-4.5-5MCC	25.4	4.5	5M Concave	>99.7%	Rear Mirror
OCZ-0.5-2-80%R	12.7	2.0	Plano	80+/3%	Output Coupler
OCZ-0.5-3.2-20MCC-87%R	12.7	3,2	20M Concave	87+/-3%	Output Coupler
OCZ-0.5-3.2-20MCC-92%R	12.7	3.2	20M Concave	92+/-3%	Output Coupler
OCZ-0.5-3-92%R	12.7	3.0	Plano	92+/3%	Output Coupler
OCZ-0.75-2-70%R	19.1	2.0	Plano	70+/3%	Output Coupler
OCZ-0.75-3-85%R	19.1	3.0	Plano	85+/-3%	Output Coupler
OCZ-0.75-2-95%R-5MCC	19.1	2.0	5M Concave	95+/3%	Output Coupler
OCZ-20-85%R-3MCC	20.0	3.5	3M Concave	85+/-3%	Output Coupler
OCZ-25-3-70%R	25.0	3.0	Plano	70+/-3%	Output Coupler
OCZ-25-3-95%R	25.0	3.0	Plano	95+/-3%	Output Coupler
OCZ-1-3-80%R	25.4	3.0	Plano	80+/-3%	Output Coupler
OCZ-1-3-85%R	25.4	3.0	Plano	85+/-3%	Output Coupler

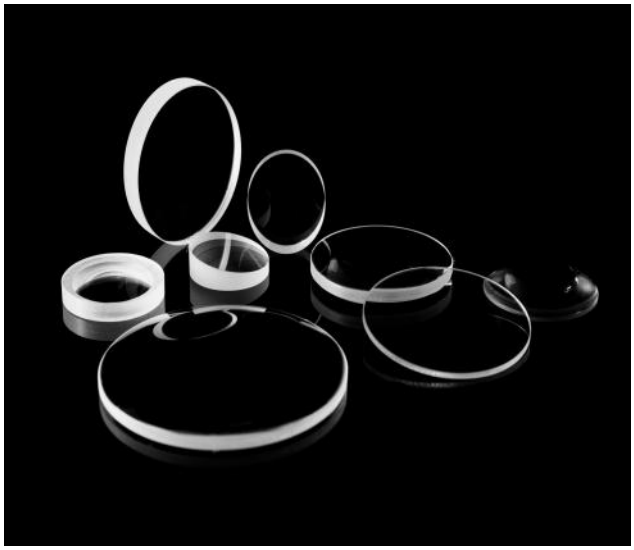

RONAR-SMITH® MEDICAL GRADE LASER OPTICS

- Medical Grade Laser Lens
- Medical Grade Laser Mirror & Reflector
- Medical Grade Laser Window
- Medical Grade Laser Lamp & Rod

Medical Grade Laser Lens

We provide a full range of focusing lens for varieties of Medical Laser System such as CO_2, Q-switched ND:YAG, ER:YAG, Ruby and Alex Laser systems. These optics have been used as replacements in most well-known medical systems such as Continuum-Biomedical, ESC, Sharplan, Candela and Coherent.

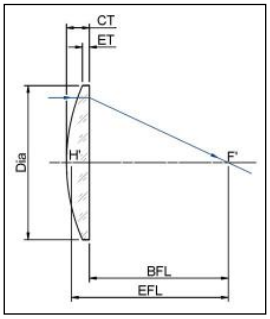

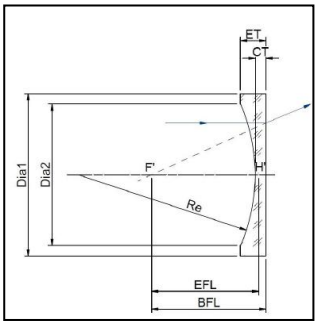

Specifications	
Diameter Tolerance	+0/-0.13mm
Thickness Tolerance	±0.25mm
Focal Length Tolerance	±2%
Edge Thickness Variation (ETV)	<=3 arc min.
Clear Aperture	>90%
Surface Flatness	λ/4 per 1″Dia @632.8nm
Surface Quality	40-20 S-D
AR Coating	R<0.2% per surface

Part No.	Dia (mm)	EFL (mm)	ET (mm)	Material	Wavelength	Applications
LZ-5.5-9.8-ET1.72E	5.5	9.8	1.7	ZnSe	2940nm	Er:YAG
LZ-7.7-32-ET1.8E	7.7	32.0	1.8	ZnSe	2940nm	Er:YAG
LZ-0.5-1.5-ET2E	12.7	38.1	2.0	ZnSe	2940nm	Er:YAG
LZ-15-36.5-ET2E	15.0	36.5	2.0	ZnSe	2940nm	Er:YAG
LZ-20-47-ET2E	20.0	47.0	2.0	ZnSe	2940nm	Er:YAG
LZ-20-72-ET3E	20.0	72.0	3.0	ZnSe	2940nm	Er:YAG
LFS-0.75-400-ET2.5E	19.1	400.0	2.5	ZnSe	2940 / 633nm	Er:YAG
LFS-0.75-600-ET2.5E	19.1	600.0	2.5	ZnSe	2940 / 633nm	Er:YAG
LBK-0.5-20-ET2	12.7	20.0	2.0	BK7	1064nm	Nd:YAG
LBK-15-25-ET2	15.0	25.0	2.0	BK7	1064nm	Nd:YAG
LBK-1-37.1-ET2	25.4	37.1	2.0	BK7	1064nm	Nd:YAG
LBK-1-40-ET2	25.4	40.0	2.0	BK7	1064nm	Nd:YAG
LBK-1-50-ET2	25.4	50.0	2.0	BK7	1064nm	Nd:YAG
LBK-1-2-ET2	25.4	50.8	2.0	BK7	1064nm	Nd:YAG
LBK-10-50-ET1.5AY	10.0	50.0	1.5	BK7	1064/ 755nm	Nd:YAG / Alex
LBK-12-12-ET1.5AY	12.0	12.0	1.5	BK7	1064/ 755nm	Nd:YAG / Alex
LBK-12-24-ET1.5AY	12.0	24.0	1.5	BK7	1064/ 755nm	Nd:YAG / Alex
LBK-12-30-ET1.5AY	12.0	30.0	1.5	BK7	1064/ 755nm	Nd:YAG / Alex
LBK-12-48-ET1.5AY	12.0	48.0	1.5	BK7	1064/ 755nm	Nd:YAG / Alex
LBK-0.5-20-ET2AY	12.7	20.0	2.0	BK7	1064/ 755nm	Nd:YAG / Alex
LBK-15-30-ET1.5AY	15.0	30.0	1.5	BK7	1064/ 755nm	Nd:YAG / Alex
LBK-15-75-ET1.5AY	15.0	75.0	1.5	BK7	1064/ 755nm	Nd:YAG / Alex
LBK-18-30-ET1.8AY	18.0	30.0	1.8	BK7	1064/ 755nm	Nd:YAG / Alex
LBK-18-36-ET1.5AY	18.0	36.0	1.5	BK7	1064/ 755nm	Nd:YAG / Alex
LBK-18-54-ET2AY	18.0	54.0	2.0	BK7	1064/ 755nm	Nd:YAG / Alex
LBK-1-50-ET2AY	25.4	50.0	2.0	BK7	1064/ 755nm	Nd:YAG / Alex

Part No.	Dia (mm)	EFL (mm)	ET (mm)	Material	Wavelength	Applications
LFS-12.7-50-ET2.5N	12.7	50.0	2.5	Fused Silica	1064 / 532nm	Nd:YAG
LFS-12.7-100-ET2.5N	12.7	100.0	2.5	Fused Silica	1064 / 532nm	Nd:YAG
LFS-15-60-ET2.5N	15.0	60.0	2.5	Fused Silica	1064 / 532nm	Nd:YAG
LFS-15-200-ET2.5N	15.0	200.0	2.5	Fused Silica	1064 / 532nm	Nd:YAG
LFS-15-250-ET2.5N	15.0	250.0	2.5	Fused Silica	1064 / 532nm	Nd:YAG
LFS-20-60-ET2.5	20.0	60.0	2.5	Fused Silica	1064 / 532nm	Nd:YAG
LFS-1-1.5-ET2N	25.4	38.1	2.0	Fused Silica	1064 / 532nm	Nd:YAG
LFS-1-2-ET2.5N	25.4	50.8	2.5	Fused Silica	1064 / 532nm	Nd:YAG
LFS-15+50-ET2.5N	15.0	-50.0	2.5	Fused Silica	1064 / 532nm	Nd:YAG
LBK-6-10-ET1.5A	6.0	10.0	1.5	BK7	755 / 633nm	Alex Laser
LBK-10.5-24.8-ET2.8A	10.5	24.8	2.0	BK7	755 / 633nm	Alex Laser
LBK-10.5-27.8-ET2.5A	10.5	27.8	2.5	BK7	755 / 633nm	Alex Laser
LBK-12-17.6-ET1.5A	12.0	17.6	1.5	BK7	755 / 633nm	Alex Laser
LBK-0.5-20-ET2A	12.7	20.0	2.0	BK7	755 / 633nm	Alex Laser
LBK-0.5-30-ET2A	12.7	30.0	2.0	BK7	755 / 633nm	Alex Laser
LBK-14-37.8-ET2.5A	14.0	37.8	2.5	BK7	755 / 633nm	Alex Laser
LBK-15-20-ET2A	15.0	20.0	2.0	BK7	755 / 633nm	Alex Laser
LBK-15-25-ET2A	15.0	25.0	2.0	BK7	755 / 633nm	Alex Laser
LBK-15-40-ET2A	15.0	40.0	2.0	BK7	755 / 633nm	Alex Laser
LBK-1-2-ET2A	25.4	50.8	2.0	BK7	755 / 633nm	Alex Laser
LFS-12.5-75-ET3A	12.5	75.0	3.0	Fused Silica	755 / 633nm	Alex Laser
LFS-13-75-ET3A	13.0	75.0	3.0	Fused Silica	755 / 633nm	Alex Laser
LFS-16-160-ET2R	16.0	160.0	2.0	Fused Silica	694.3 / 633nm	Ruby
LFS-13+33.26-ET4.3R	13.0	-33.3	4.3	Fused Silica	694.3 / 633nm	Ruby
LFS-13+46.96-ET4.3R	13.0	-47.0	4.3	Fused Silica	694.3 / 633nm	Ruby
LFS-15+75-ET2.5R	15.0	-75.0	2.5	Fused Silica	694.3 / 633nm	Ruby
LBK-15-20-ET2VIS	15.0	20.0	2.0	BK7	400-700nm	-
LBK-15-30-ET2VIS	15.0	30.0	2.0	BK7	400-700nm	-
LBK-15-40-ET2VIS	15.0	40.0	2.0	BK7	400-700nm	-
LBK-15-50-ET2VIS	15.0	50.0	2.0	BK7	400-700nm	-
LBK-15-70-ET2VIS	15.0	70.0	2.0	BK7	400-700nm	-
LBK-20-40-ET2VIS	20.0	40.0	2.0	BK7	400-700nm	-
LBK-20-63.5-ET2VIS	20.0	63.5	2.0	BK7	400-700nm	-

NOTE: Medical laser lenses of different specifications are available upon request.

Medical Grade Laser Mirror & Reflector

We provide a full range of mirrors for medical applications and these optics have been used as replacements in most medical systems.

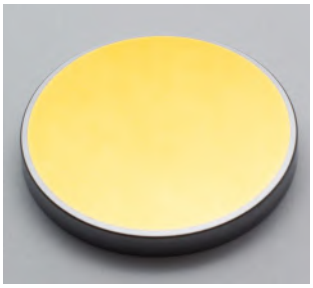

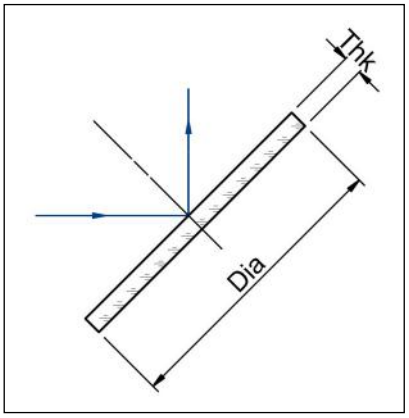

Specifications	
Diameter Tolerance	+0/-0.13mm
Thickness Tolerance	±0.25mm
Parallelism	< 3 arc min.
Clear Aperture	>90%
Surface Flatness	λ/4 per 1″Dia@632.8nm
Surface Quality	40-20 S-D

Part No.	Dia (mm)	Thk (mm)	AOI (deg)	Material	Wavelength
RBK-25-3YG	25.0	3.0	45	BK7	1064/532nm
RBK-1-6.3	25.4	6.3	45	BK7	1064nm
RBK-25-3YGR	25.0	3.0	45	BK7	1064/650/532nm
RBK-25-1AY	25.0	1.0	45	BK7	1064/755nm
RBK-2-5-808	50.8	5.0	45	BK7	808nm
RBK-1-6.3G	25.4	6.3	45	BK7	532nm
RBK-30-5G	30.0	5.0	45	BK7	532nm
RBK-30-5GR	30.0	5.0	45	BK7	532/645nm
RFS-50-5	50.0	5.0	45	Fused Silica	1064nm
RFS-30-5U	30.0	5.0	45	Fused Silica	355nm
RFS-2-6.3U	50.8	6.3	45	Fused Silica	355nm

NOTE: Medical laser mirrors of different specifications are available upon request.

Medical Grade Laser Window

We provide windows for varieties of *medical laser* systems such as CO_2, Q-switched Nd:YAG, ER:YAG, Ruby and Alex Laser systems. These optics have been used as replacements in most well-known medical systems such as Con-Bio, ESC, Sharplan, Candela and Coherent.

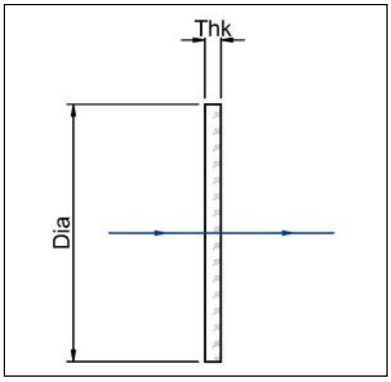

Specifications	
Diameter Tolerance	+0/-0.13mm
Thickness Tolerance	±0.25mm
Parallelism	< 3 arc min.
Clear Aperture	>90%
Surface Flatness	λ/4 per 1″Dia@632.8nm
Surface Quality	40-20 S-D

Part No.	Dia (mm)	Thk (mm)	Material	Wavelength	Applications
WFS-3.5-1E	3.5	1.0	Fused Silica	2940nm	Er:YAG
WSP-15.7-1.1	15.7	1.1	Sapphire	1064/750nm	-
WSP-1-3	25.4	3.0	Sapphire	1064/750nm	-
WBK-0.5-2N	12.7	2.0	BK7	1064/532nm	Nd:YAG
WBK-0.6-2N	15.2	2.0	BK7	1064/532nm	Nd:YAG
WBK-0.75-2.5N	19.1	2.5	BK7	1064/532nm	Nd:YAG
WBK-1-3N	25.4	3.0	BK7	1064/532nm	Nd:YAG
WBK-1.5-4N	38.1	4.0	BK7	1064/532nm	Nd:YAG
WBK-16-1A	16.0	1.0	BK7	755/633nm	Alex Laser
WBK-0.5-2R	12.7	2.0	BK7	694/633nm	Ruby
WBK-0.6-2R	15.2	2.0	BK7	694/633nm	Ruby
WBK-0.75-2.5R	19.1	2.5	BK7	694/633nm	Ruby
WBK-1-3R	25.4	3.0	BK7	694/633nm	Ruby
WBK-1.5-4R	38.1	4.0	BK7	694/633nm	Ruby

NOTE: Medical laser windows of different specifications are available upon request.

Laser Lamp

We provide the solid-state laser industry with comprehensive selection of laser lamp available. All lamps provide optimum performance and reliability. The product codes of the laser lamp is arranged accordingly to their use in the various types laser machines in the industry.

Part No.	Laser Machine	Brand
LLX-S1311	Flashlamp for sharplan Ruby 5000	SHARPLAN
LLX-737	Laser Lamp for Lumenis Erbium, with red/black wire	LUMENIS
LL-NL7202	Fotona QX Max Flash Lamp	FOTONA
LLXF1265F	Laser lamp for Fotona Fidelis (1J)	FOTONA
LLK-S7060	Laser lamp for Fotona Fidelis (1J)	FOTONA
LL-SXF1265F	Flash Lamp, Fidelis/Dualis	FOTONA
LL-S7060	Flash Lamp, Fidelis M320A	FOTONA
LLK-S9551	Cynosure, Apogee	CYNOSURE
LLK-S7716	Continuum Surelite II, Powerlite 7010, 7020, 7030, 8010(oscillator), 203-0035	CONTINUUM/ QUANTEL U.S.A
LLK-S8047	Laser Lamp for Medilite IV,Continuum 203-0032 model: hoya/con-bio	CONTINUUM
LL-S8047	Flash Lamp, FI711-09, C6	CON-BIO
LLK-S8511	Laser lamp for Candela model: Gentlelase	CANDELA LASER

NOTE: Laser lamps of different specifications are available upon request.

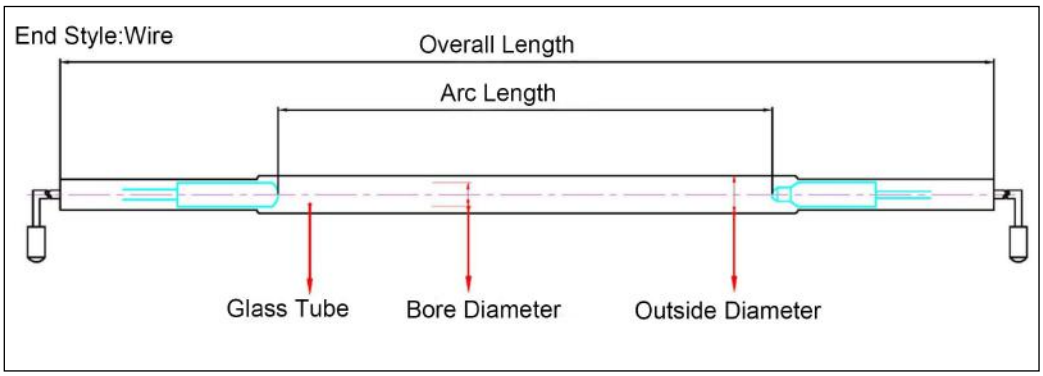

Laser Rod

Laser rods are used as laser media in the generation of a laser beam through stimulated emissions.

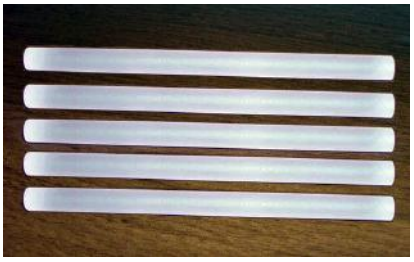

Specifications	
Dimension Tolerance	Dia,+0/-0.025mm; L, +0.5mm
Nd Dopant Concentration	1.0-1.1at% (+0.1at%)
Orientation	〈111> crystalline direction
Flatness	lambda/10@633nm
Surface Quality	s/d,10/5(before coating); s/d,20/10(after coating)
Chamfer	〈0.13(+0.08)mm@45deg; Cracks: <0.1mm

Part No.	Dia (mm)	Length (mm)	Remarks
YAGROD-3*120	3.0	120.0	1.0-1.1%Nd dopant, Ends flat/flat with AR@1064nm
YAGROD-4*108	4.0	108.0	1.0-1.1%Nd dopant, Ends flat/flat with AR@1064nm
YAGROD-4*120	4.0	120.0	1.0-1.1%Nd dopant, Ends flat/flat with AR@1064nm
YAGROD-6.35*105	6.0	105.0	1.0-1.1%Nd dopant, Ends flat/flat with AR@1064nm
YAGROD-6.35*125	6.0	125.0	1.0-1.1%Nd dopant, Ends flat/flat with AR@1064nm
YAGROD-6.35*154	6.4	154.0	1.0-1.1%Nd dopant, Ends flat/flat with AR@1064nm
YAGROD-7*100	7.0	100.0	1.0-1.1%Nd dopant, Ends flat/flat with AR@1064nm
YAGROD-7*162	7.0	162.0	1.0-1.1%Nd dopant, Ends flat/flat with AR@1064nm
YAGROD-7*165	7.0	165.0	1.0-1.1%Nd dopant, Ends flat/flat with AR@1064nm
YAGROD-8*110	8.0	110.0	1.0-1.1%Nd dopant, Ends flat/flat with AR@1064nm
YAGROD-8*165	8.0	165.0	1.0-1.1%Nd dopant, Ends flat/flat with AR@1064nm
YAGROD-8*195	8.0	195.0	1.0-1.1%Nd dopant, Ends flat/flat with AR@1064nm

NOTE: Laser rods of different specifications are available upon request.

RONAR-SMITH® BEAM DELIVERY SYSTEM

- Fiber Laser Collimator
- Objective Lens
- Refractive Beam Shaper
- Diffractive Optical Components (DOE)
- Laser Attenuator
- Laser Cutting Head
- Laser Welding Head
- Laser Cleaning Head

Laser Collimator

Features:

- Maximum 3000W tolerable power which is suitable for high power laser machining applications
- Two type of mount connecting interfaces（QB/QBH）
- Wide range of focal lengths
- Water-cooling：1.8L/min , 30psi
- Easy operation

COL Series—Fiber Collimator

COL Series fiber collimators are used in fiber laser cutting and welding applications as collimating lenses. With low absorption coating and water cooling structure, it is able to work under high power laser of thousand watt.

Part No.	Focal Length (mm)	Lens Dia (mm)	Cooling Method	Wavelength
COL-D25-F50-NA0.22	50.0	25.0	Water cooled	1030-1080nm
COL-D25-F60-NA0.173	60.0	25.0	Water cooled	1030-1080nm
COL-D25-F60-NA0.186	60.0	25.0	Water cooled	1030-1080nm
COL-D25-F83-NA0.131	83.0	25.0	Water cooled	1030-1080nm
COL-D25-F85-NA0.129	85.0	25.0	Water cooled	1030-1080nm
COL-D25-F100-NA0.11	100.0	25.0	Water cooled	1030-1080nm
COL-D40-F100-NA0.22	100.0	40.0	Water cooled	1030-1080nm
COL-D40-F120-NA0.167	120.0	40.0	Water cooled	1030-1080nm
COL-D40-F150- NA0.133	150.0	40.0	Water cooled	1030-1080nm
COL-D50-F120-NA0.187	120.0	50.0	Water cooled	1030-1080nm
COL-D50-F160-NA0.147	160.0	50.0	Water cooled	1030-1080nm
COL-D50-F200-NA0.116	200.0	50.0	Water cooled	1030-1080nm
COL-D50-F250-NA0.094	250.0	50.0	Water cooled	1030-1080nm

NOTE: Fiber collimators of different FL are available upon request.

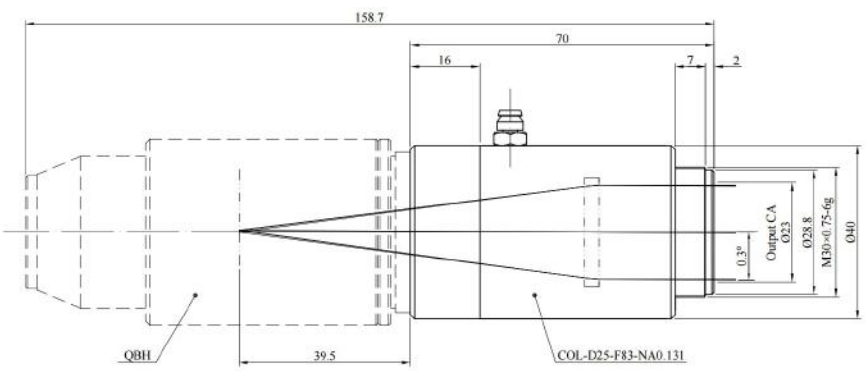

Optional: QBH Connector

NIR APO Objective Lens

- Used for near infrared laser system
- Co-Axial vision for real time monitoring
- Infinity optical system, tube lens focal length 200mm
- Parfocal Distance 95mm
- Objective screw M26 x 0.706
- Repair touch panel & solar cell

Flat Apochromat M PLAN APO L	N.A	WD (mm)	Focal Length (mm)	Resolution (μm)	Depth of Focus (μm)	View Field (Φ24)	Wavelength (nm)
NIR 2X	0.055	34.6	100.0	5.0	91.0	Φ12.0	532-1064
NIR 5X	0.14	45.0	40.0	2.0	14.0	Φ4.8	532-1064
NIR 10X	0.28	34.0	20.0	1.0	3.5	Φ2.4	532-1064
NIR 20X	0.29	30.8	10.0	1.0	3.3	Φ1.2	532-1064
NIR 20X	0.42	20.0	10.0	0.7	1.6	Φ1.2	532-1064
NIR 50X	0.42	20.1	4.0	0.7	1.6	Φ0.48	532-1064
NIR 50X	0.67	10.0	4.0	0.4	0.6	Φ0.48	532-1064
NIR 50X	0.8	4.04	4.0	0.34	0.43	Φ0.48	532-1064

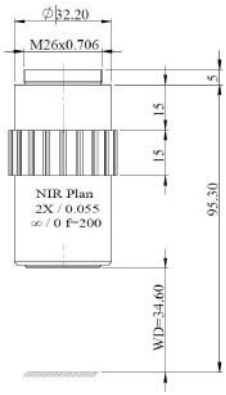

NIR 2X

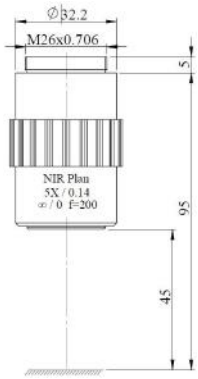

NIR 5X

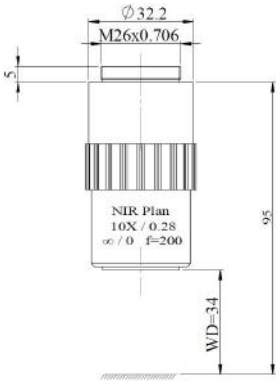

NIR 10X

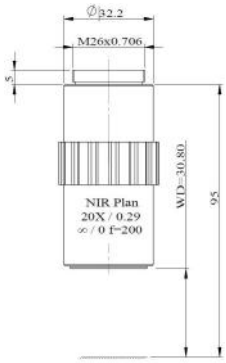

NIR 20X - 0.29

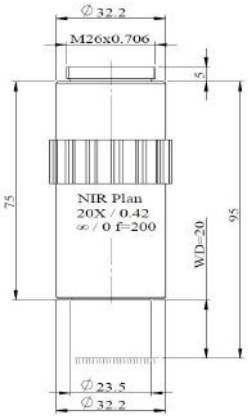

NIR 20X - 0.42

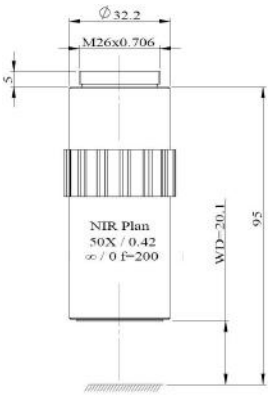

NIR 50X - 0.42

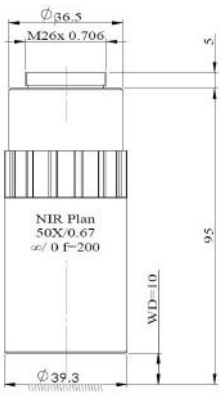

NIR 50X - 0.67

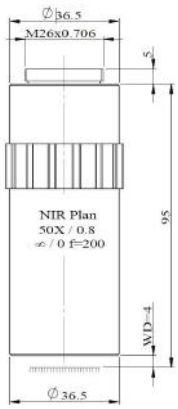

NIR 50X - 0.8

Refractive Beam Shaper

The beam shaper's function is to transform the Gaussian profile of a light source (commonly laser) to a Top-Hat profile. The design is based on transmissive model that can be used with maximum input beam size of 4.6mm and output of 8mm. The output beam after the beam shaper is collimated, thus it can be used with normal lenses. We are open for other wavelength requirements based on your specific applications.

Applications:
It is commonly used for drilling and marking applications. The Top Hat profile cut or mark result has higher quality than the Gaussian. It is widely used in the industry.

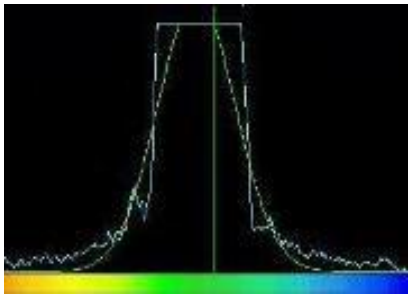

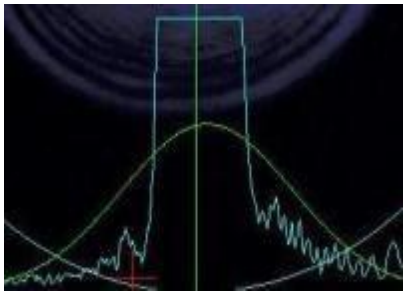

BS-W600 Series - Beam Shaper

Part No.	Applicable Input Beam Size (mm)	Output Beam Size (mm)	Max. outer Dia (mm)	Length (mm)	Beam Shaping Distance (mm)	Wavelength
BS-266-6-W600	5.8-6.0	5.0-5.5	30.0	151.6	100-600	266nm
BS-355-6-W600	5.8-6.0	5.0-5.5	30.0	160.5	100-600	355nm
BS-532-6-W600	5.8-6.0	5.0-5.5	30.0	171.5	100-600	532nm
BS-1064-6-W600	5.8-6.0	5.0-5.5	30.0	175.5	100-600	1064nm
BS-10600-12-W600	12.0	12.0	46.0	285.3	25-600	10600nm

BSFL Series -Focal Type Beam Shaper
355 / 532 / 1064 nm / 10.6um

The focal type beam shaper comprises a focusing lens to acquire a top hat focused spot at the target plane and able to achieve sub-micron level with good uniformity. One of the advantages of focal type beam shaper over other designs is that it provides flexibility to the users as they can vary to their desired spot size accordingly by changing the focusing lens. Furthermore, this focal type beam shaping system has extended the working range whereby a focusing lens can be placed at any distance behind the beam shaping system without affecting the top hat spot quality.

Below figure shows the focused top hat irradiance profile of a focused spot when the focal beam shaper being used in conjunction with a diffraction limited focusing optics.

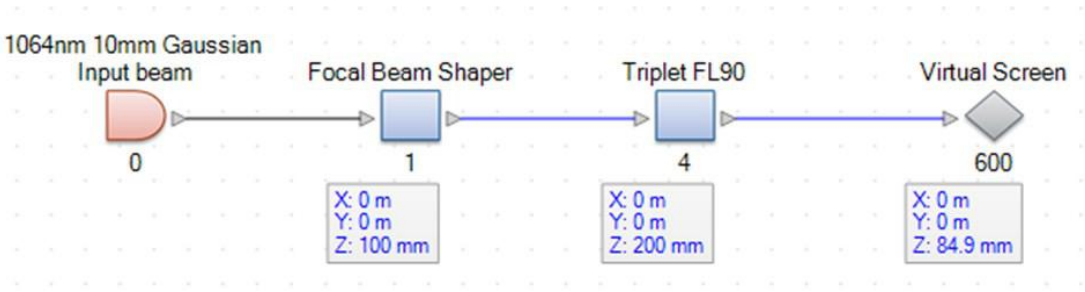

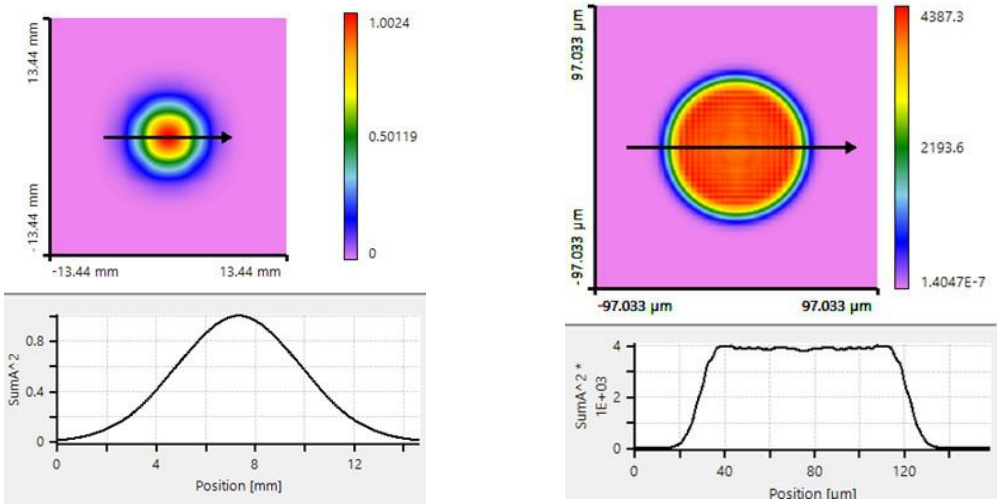

Focal beam shaper input and output focused beam irradiance distribution

BSFL Series -Focal Type Beam Shaper 355 / 532 / 1064 nm / 10.6um

In below figure is microscopic views of focal spot with and without focal beam shaper. Focal beam shaper is able to produce extended depth of focus with straight wall edge as what we can see in the simulated top hat profile. While without focal beam shaper, we can see the kerf width of focal Gaussian spot and substantial heat affected zone.

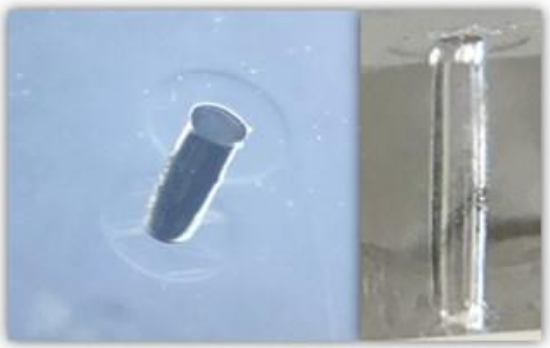

With focal type beam shaper

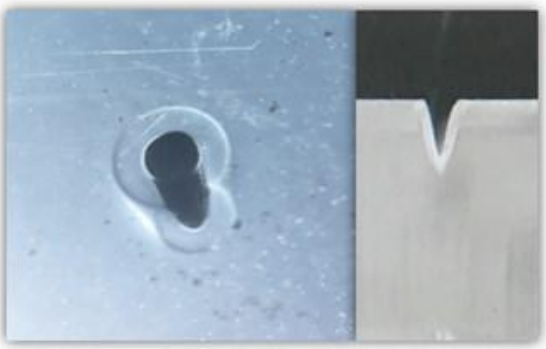

Without focal type beam shaper

Focal Type Beam Shaper 1064nm

Specifications

Part No.	BSFL-355-6	BSFL-532-10	BSFL-1064-10	BSFL-10.6-20
Wavelength	355nm	532nm	1064nm	10.6um
Beam Mode	TEMoo			
M2	<1.2			
Beam Ellipticity	~0.98-1			
Input Beam Waist Diameter($1/e^2$) (mm)	6.0	10.0	10.0	20.0
Output Beam Diameter (mm)	6.0	10.0	10.0	20.0
Input Full Beam Divergence Angle (mrad)	~0.1	~0.1	~0.2	~0.04
Output Full Beam Divergence Angle (mrad)	~1.0	~1.1	~1.6	~4.7

Applications:

Surface heat treatment, solar cell scribing, via-hole drilling, laser ablation, dicing, micromachining, marking and cutting.

Optional:

Related focusing lens is available upon request.

Diffractive Optical Elements (DOE)

DOE serve simulation of laser optics, micro optical systems, diffractive optics, interferometers, imaging and illumination systems. Optical design may contain refractive, diffractive, hybrid, Fresnel and GRIN lenses, diffractive optical elements, diffusers, beam shapers, diffractive beam splitters, computer generated holograms, phase plates, elements with free form surfaces and micro lens arrays. Based on unified optical modelling, the light propagation can be provided using different propagation models ranging from geometrical optics to physical optics.

DOE— Beam Splitter Element

The beam splitting element splits laser beam to any number of sub-beams, without altering the characteristics of the original beam, (except for the spot size and the direction of transmission.). Beam splitting in 2-D has also been realized, as shown in the picture of a beam 32 * 32 split beams. A beam splitting element to realize a 1-D line array of light spots with customized spot lengths and separation angels between spots, can be designed according to your requirements.

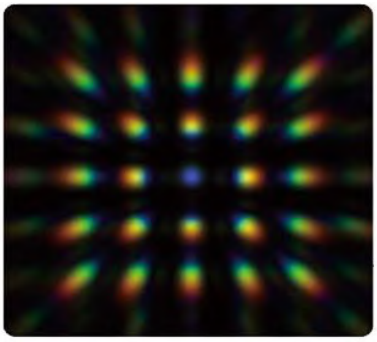

Applications

- Laser Cutting
- Laser Drilling
- 3-D Somatosensory
- Laser Scribing
- Fiber Optic Communications etc.

Beam Splitter

Part No.	Wavelength	Number of Spots	Image Lens	Size (mm)
HL-7X7DEG	10600nm	7X7	2f System Add Another Focus Lens f=50mm	13X13x1
HL-8X8DEG	2940nm	8X8	2f System Add Another Focus Lens f=50mm	13X13x1, 20X20x1
HL-8X8DEG	1064nm	8X8	2f System Add Another Focus Lens f=50mm	13X13x1, 20X20x1
HL-9X9DEG	532nm	9X9	2f System Add Another Focus Lens f=50mm	13X13x1, 20X20x1

Line Beam

Part No.	Wavelength	Line Length	Line Width	Image Lens	Size(mm)
HL-100XW0.2	355nm-1080nm	200mm	10 to 200um	f=50mm-500mm	13X13x1, 20X20x1

***Customization**

Please provide us the following information:

1. Laser wavelength
2. Spot size
3. Focal length of the focusing lens (if applicable)
4. Divergent angles of each beam

DOE— Optical Diffuser Element

The optical diffuser allows users to form homogenized spot with a specific pattern and a specific divergence angle. Below are some sample results of homogenization:

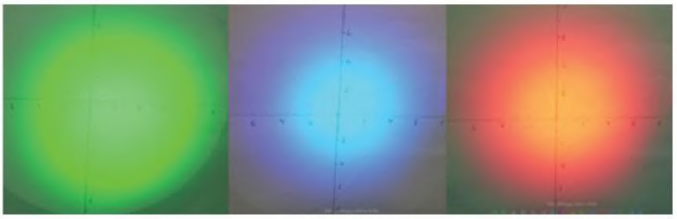

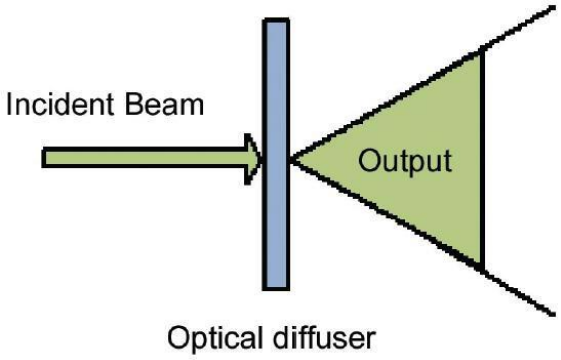

Applications

- Laser Display
- Medical Laser
- Laser Pumping
- Laser Peeling
- Laser Communications

Element Characteristics

Optical diffuser efficiency is up to 99%，angle of divergence（FWHM based，i.e. the antitangent value of the semiangle of the spot at 1m）is up to 41 degrees full angle. Divergence angle can be customized to customer demand.

Design Requirements

The customer needs to provide the following parameters: laser wavelength, divergence angle corresponding to the diffusion spot

DOE— Diffuser Beam Homogenizer

The diffuser beam homogenizer transfers single mode and multi-mode lasers to get a special spot with evenly distributed energy. A square homogenized spot is shown in the figure. Our diffuser beam homogenizers not only guarantee the homogeneity of the spot, but also realize shape boundaries and high energy efficiency.

- Suitable for both Single mode and multi-mode lasers
- Generally made of quartz, sometimes made of glass or plastic.
- Any spot shape is achievable.
- Excellent spot homogeneity, sharp spot boundary
- Precise spot divergence angle

Applications

- Laser Beam Homogenizing
- Metal Welding
- Laser materials processing: cutting, marking, drilling, etc.
- Laser testing and other examinations

Specifications:

Material	Fused Quartz, Glass, Plastic
Wavelength Range	193nm - 10.6μm
DOE Type	2nd order, 4th order, 8th order, 16th order
DOE Size	2mm - 100mm
Diffraction Efficiency	75% - 98%
Coating	Anti-Reflective Coating
Out Divergence Angle @ 532nm	Several mrads to 41°

DOE— Top-hat Beam Shaping Element

The reshaping of a laser beam to a top-hat beam whose spot is of known size and shape, is getting more and more attentions nowadays. Our top-hat beam shaping element features high uniformity on the top and a steep boundary; and the spot size and the shape can be customized according to customer demand.

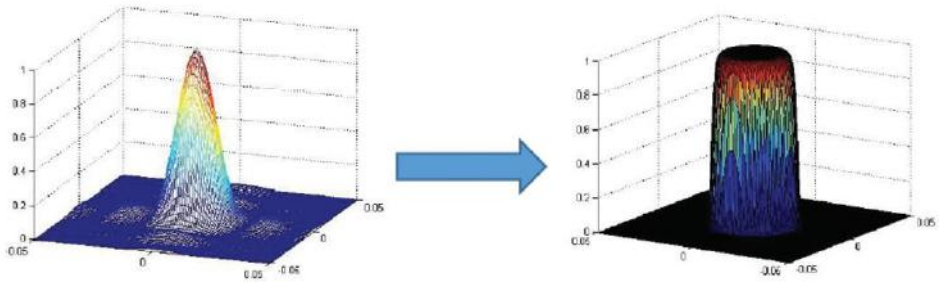

Applications

- Laser Cutting
- Laser Welding
- Laser Scribing
- Thin-film Processing, Solar Panels Cutting, LED Filament Processing

Specifications:

Parameter	Value
Tolerance Range of Incident Light Spot Size	+/- 5%
Efficiency	95%
Material	Fused Silica, Glass, etc

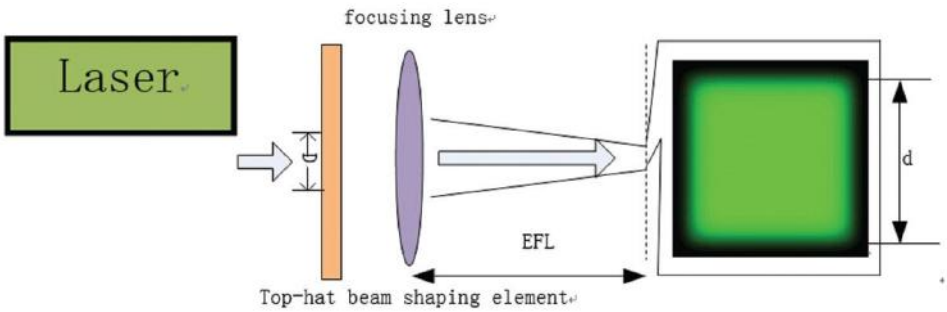

The beam shaper obtains desired top-hat spot on the plateau near the focal plane, instead of the focal plane. The optical position is usually a few um only away from the focal plane. Customers need to provide the following parameters:

- Laser wavelength
- Spot size
- Working distance
- Output spot size and shape

Laser Attenuator

High power lasers require precise control of energy levels. The attenuator module is a compact accessory that accurately sets the energy transmitted while keeping the laser running under its more stable conditions and there is no beam displacement. The attenuator is suitable for inputs of which average power is below 150W. It has been proven stability in industry. Motorized laser attenuators are also available based on the request. The laser beam can be operated manually.

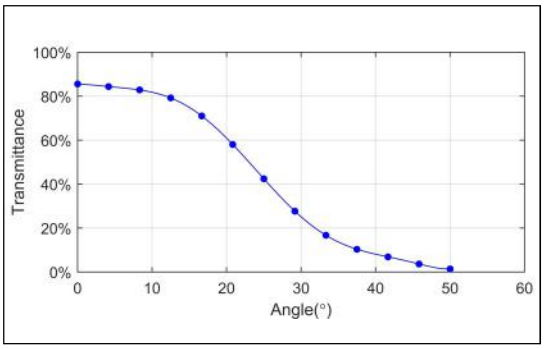

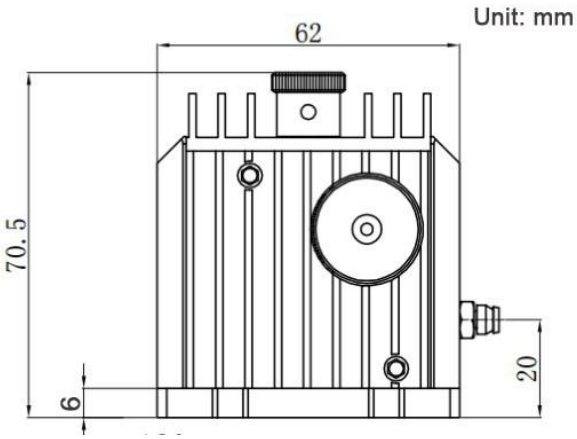

ATT Series —Laser Attenuator

Part No.	Wavelength	Input CA (mm)	Transmission Variable Range
ATT-355	355nm	3-18	10%-90%
ATT-532	532nm	3-18	10%-90%
ATT-1064	1064nm	3-18	10%-90%
ATT-1064-E	1064nm	3-18	80%-90%
ATT-9400	9400nm	3-18	10%-90%
ATT-10600	10600nm	3-18	10%-90%

NOTE: ATT-XXX-MOT motorized attenuator is available upon request.

Laser Cutting Head

The laser cutting head is a part of laser cutting machine that focuses the laser beam onto the material to be cut. It contains a reflecting mirror, focal lens, a nozzle and a gas or water jet.
The laser cutting head can be used in laser cutting machine to reflect and focus the expanded beam into a small spot. It can be used to cut various materials such as acrylic, paper, cloth and many others.

LCH Series - Single FL Cutting Head

Each cutting head consists of:

- 1.5″ Dia reflecting mirror, reflectivity >99.5%
- Adjustable mirror mount
- Focal length of your choice
- Built in water/air cooling device
- Linear guider
- Nozzle and gas jet port

Specifications	
Maximum Power	<500W
Cooling	Water or Air Cooled
Concentricity after WD Adjustment	+/-0.mm
Working Distance Adjustable Range	0-40mm
Nozzle Adjustable Range in X/Y	+/-1mm
Nozzle Adjustable Range in Z	+/-1mm
Maximum Input Beam Diameter	24mm
Mirror Tilt Angle	Adjustable, +/-3 degree

Part No.	Focal Length (mm)	Lens Dia (mm)	Mirror Size (mm)	Wavelength
LCH-10.6-2.0	50.8	25.4	38.1	10.6μm
LCH-10.6-2.5	63.5	25.4	38.1	10.6μm
LCH-10.6-5.0	127.0	25.4	38.1	10.6μm
LCH-1064-100	127.0	25.4	50x3	1064nm

NOTE: Customized laser cutting heads are available upon request.

LDH Series—Switchable FL Laser Cutting Head

The Switchable FL Cutting Head is used in CO_2 laser cutting machines for thin metal boards or thick acrylic/wooden boards. The shorter focal length is used for thin metal boards, while the longer focal length is used for thick boards. Changing of focal lengths is simply done by inserting the appropriate focal lens into the drawer-type mounting.

Each unit consists of:

- 1.5” reflecting mirror, reflectivity >99.5%
- Adjustable mount for reflecting mirror
- Switchable focal lenses, each with different focal length
- Drawer-type focal lens mounting
- Nozzle and gas jet port
- Built in water/air cooling device

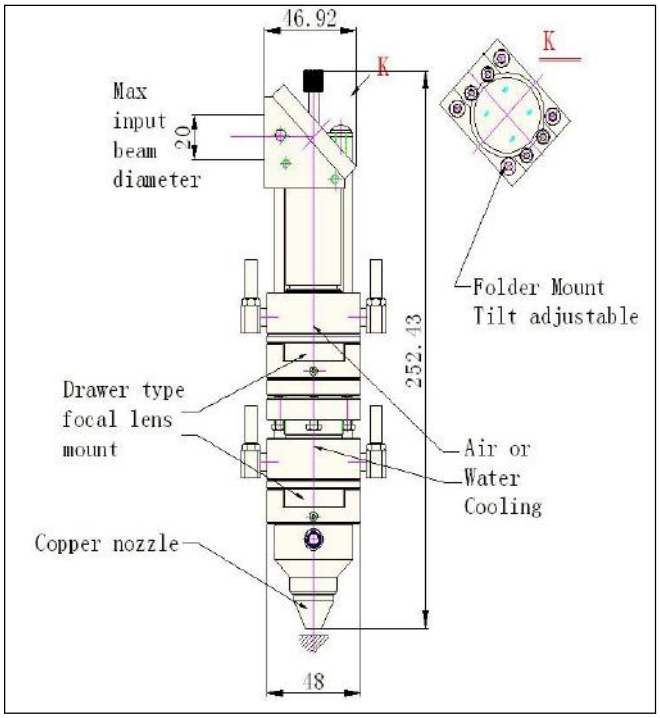

Part No.	Focal Length (mm)	Lens Dia (mm)	Mirror Size (mm)	Wavelength
LDH-10.6-2.0/2.5	50.8/63.5	25.4	38.1	10.6μm
LDH-10.6-2.5/5	63.5/127.0	25.4	38.1	10.6μm

NOTE: Laser cutting heads for 1064nm ND:YAG are available upon request.

FXY Series—Laser Cutting Head

FXY series fiber laser XY cutting head is used to focus a collimated beam from a fiber laser to perform cutting and drilling operations. It is equipped with a height sensor unit (HSU) allowing the working distance to be automatically maintained.

Specifications	
Maximum Power	1000W
Input Diameter	<40mm
Collimator FL	50/60/75/100/125/150mm
Focusing FL	50/60/75/100/120/150mm
Protective Window	40mm x 3mm
Vertical Adjustment	+/-4mm
Horizontal Adjustment	+/-1.5mm
Cooling Method	Water Cooled
Power Supply of Height Controller	150V-220V (to be specified)

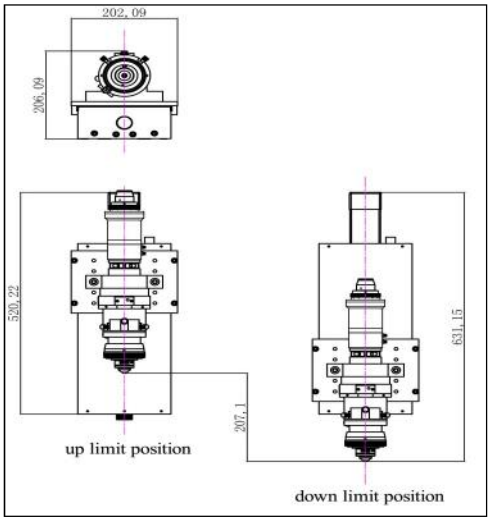

Part No.	Focal Length (mm)	Applicable for Laser Power (W)	Clear Aperture (mm)	Cutting Thickness(mm)	Remarks
FXY-D25-F50	50.0	<800	25.0	<0.5	2D Cutting
FXY-D25-F60	60.0	<800	25.0	<1.0	2D Cutting
FXY-D25-F75	75.0	<800	25.0	<1.5	2D Cutting
FXY-D25-F100	100.0	<800	25.0	<2.0	2D Cutting
FXY-D25-F125	125.0	<800	25.0	<3.0	2D Cutting
FXY-D25-F150	150.0	<800	25.0	<5.0	2D Cutting
FXY-D30-F100	100.0	<1000	30.0	<2.0	2D Cutting
FXY-D30-F150	150.0	<1000	30.0	<5.0	2D Cutting
FXY-D30-F200	200.0	<1000	30.0	<10.0	2D Cutting

FSMT Series— Smart Laser Cutting Head

FMST laser cutting head is compact and efficient for lower power fiber laser cutting(<1000W); it is suitable for IPG / Rofin / Coherent / Raycus fiber laser with compliant connector. Equipped with HSU, it is widely used for automation and robot 3D cutting.

Specifications	
Laser Wavelength	1060-1080nm
Input Diameter	<40mm
Cooling Method	Water Cooled
Connection	QBH or QCS
Power Supply of Height Controller	150V-220V (to be specified)
Including HSU	Height Sensing Unit

Head mounted on motion system
the linear guider and the servo motor

Part No.	Focal Length (mm)	Clear Aperture (mm)	Cutting Thickness (mm)	Applicable Laser Power (W)
FSMT-D25-F100	100.0	25.0	2.0	<800
FSMT-D25-F125	125.0	25.0	5.0	<800
FSMT-D25-F150	150.0	25.0	5.0	<800
FSMT-D30-F150	150.0	30.0	10.0	<1000

FPW Series-Coaxial Laser Welding Head

Equipped with CCD and CCTV lens, FPW Coaxial Welding Heads provide customers a real time monitor and inspection of the welding effects.

Features:

- Multiple connector types: QBH,D80, LLK-B, SMA905
- Focal length of 100mm or at your choice
- Water cooling for collimator and focal lens

Specifications	
Maximum Power	1000W
Fiber Connector	QBH, D80, LLK-B, SMA905
Wavelength	1060-1070nm
Cooling Method	Water Cooled
Maximum Input Beam NA	0.22
Focal Lens Size	40mmx3mm

Part No.	Focal Length (mm)	Lens Dia (mm)	Wavelength
FPW-100-CCD	120.0	40.0	1060-1070nm

Laser Cleaning Head (P/N:LCLH-254)

Laser cleaning is a “green” technique without the use of any chemicals or cleaning fluids. Contactless cleaning provides effective protection for the equipment, thus makes it a sustainable approach.

Compact laser cleaning head can be integrated into robotics with high degree of automation.

Laser cleaning can thoroughly remove numerous types of surface contaminants on various materials. Moreover, the surface of the material can be selectively cleaned as designed, without subsurface damage.

Specifications	
Wavelength	1000-1100nm
Power	200W
Fiber Interface	Ø35mm Collimated Output Isolator
Focus Spot Size	<1mm
Focal Length	254mm
Scanning Field	Horizontal 0-110mm
Dimension	343x137x120mm
Weight	3.0kg
Cooling Method	Air Cooling

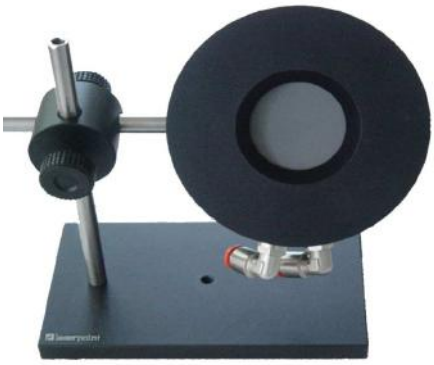

RONAR-SMITH® LASER OPTICS ACCESSORIES

- Laser Eyewear
- Laser Shutter
- Laser Power Meter

Laser Safety Products

Laser Eyewear

We offer a wide range of different laser safety eyewear filters with various protection and visible light transmission (VLT) levels.

Advantages:
High optical density (OD) and visible light transmission (VLT)
Long usage life due to superior scratch resistance

Part No.	Highest OD	Color	Material	VLT	Applicable lasers
LV-F01.T5K07.5000	OD 7+ @ 740 - 770 nm & 1000 - 1600 nm	Blue-green	Thin-Film-Coated Glass	60%	1,4,5,7,9,11,12,14
LV-F01.T5K11.5000	OD 7+ @800 - 860 & 1000-1600 nm	Clear	Nanospec/ Thin-Film-Coated Glass	60%	1,4,5,8,11,12,14
LV-F07.P5E01.5000	OD 7+ @190 - 315 nm	Orange	Polycarbonate	40%	2,8,12
LV-F07.P5K01.5000	OD 7+ @1060 - 1090 nm	Green	Polycarbonate	10%	4,6,10,12, 14
LV-F07.P5H01.5000	OD 7+ @980 - 1065 nm	Light Green	Polycarbonate	35%	1,4,6,14
LV-F14.P5E03.5000	OD 7+ @690 - 710 nm	Blue-green	Polycarbonate	45%	6,10,13
LV-F14.T5K02.5000	OD 7+ @1000 - 1600 nm	Clear	Glass	71%	3,4,5,6,7,9, 11,12
LV-F14.T5K11.5000	OD 7+ @800 - 860 nm &1000 - 1600 nm	Clear	Nanospec/ Thin-Film-Coated Glass	60%	1,4,5,7,11, 12,14
LV-F20.P5E03.5000	OD 7+ @690 - 710 nm	Blue-green	Polycarbonate	45%	6,10,13
LV-F22.P5H03.5000	OD 7+ @ 660 - 775 nm	Blue	Polycarbonate	10%	1,4,13
LV-F22.P5L16.5000	OD 8+ @ 315-532 nm & 890-1064 nm	Brown	Polycarbonate	15%	2,4,6,8,12,13,14
LV-F24.P5K01.5000	OD 7+ @1060 - 1090 nm	Green	Polycarbonate	10%	4,6,10,12, 14

1- Alexandrite; 2– Argon; 3- CO_2 (Carbon dioxide); 4- Diode; 5– Disk; 6- Dye; 7- Er:YAG (Erbium YAG); 8- Excimer; 9– Fiber; 10- He Ne (Helium-neon); 11- Ho:YAG (Holmium YAG); 12- Nd:YAG; 13– Ruby; 14- Ti:Saphire.

$$OD = \log_{10}\frac{1}{T}$$

$$T = 10^{-OD}$$

$$Where\ OD\ =\ Optical\ Density,\ T =\ Transmittance\ (decimal)$$

OD	T	OD	T	OD	T	OD	T	OD	T
0.0	100%	2.0	1%	4.0	0.01%	6.0	0.0001%	8.0	0.000001%
1.0	10%	3.0	0.1%	5.0	0.001%	7.0	0.00001%	9.0	0.0000001%

Laser Shutter

Laser Beam Safety (Interlock) Shutter SH-10 Shutter (Series)

Features and advantages:

- Integrated return spring * 0.5" (13mm) aperture, larger optional
- Small size 1.7"W x 2.3"L x 1.2"D Boxed: 1.9"W x 2.8"L x 1.3"D
- Low cost
- High reliability, long life
- Standard or custom blade
- Returns to "OFF" position with a power failure
- 5V, 12V or 15V, or 24V dc operation
- Simple drive circuit for TTL input commands
- Special pricing for OEM applications
- RoHS compliant

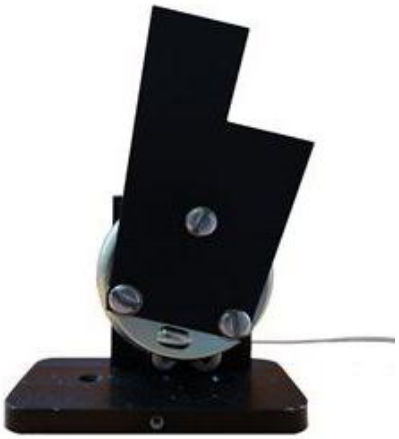

SH series laser shutter consists of a blade mounted on a rotary solenoid with a limited rotation angle.

When the shutter is powered, the blade moves to an "ON" position and clears the path for a laser beam. When the power is turned off, the return spring of the shutter moves the blade to an "OFF" position and blocks the laser beam. The standard blade material is 0.01" thick anodized aluminium to meet laser specifications. Other materials and thickness are available for uses like plasma, X-ray and laser light, VIS, IR and UV.

The following models are offered for the SH-10 laser beam safety shutter:

Part No.	For Horizontal& Vertical Mounting	Able be Mounted to an Optical Table	With a Mounting Plate	Position Indicator	Boxed
SH-10	√	X	X	X	X
SH-10-M	√	√	√	X	X
SH-10-MP	√	√	X	X	X
SH-10-B	√	X	X	X	√
SH-10-PI	√	√	X	√	X
SH-10-PI-B	√	√	X	√	√

NOTE: The above products have a life operation of 2 million cycles min. We also offer long life (-L) laser safety shutter for a life operation of 50 million cycles min.(e.g.: SH-10-L, SH-10-M-L, SH-10-MP-L, SH-10-PI-L or SH-10-B-L)

Laser Power Meter

Our product lines include:

- Power and Laser Energy Meters
- Laser Power Probes
- OEM Sensors
- Industrial Processes Monitor Systems

Part No.	Max. Power (W)	Max. Power Density (W/cm^2)	Sensitive Diameter (mm)	Power Calibration Uncertainty	Repeatability
QA-10-D20-BBF	10	200	20	±3%	±1%
QW-6000-D55-SHC	6000	4000	55	±5%	±1%
Fit-50	50	9000	20	±3%	±1%
Fit-200	200	6000	20	±3%	±1%
CRONOS-LP1.5	1500	3500	40	±4%	±2%
CRONOS-LP5.0	5000	2500	55	±4%	±5%
A-30-D25-HPB-USB	30	18000	25	±3%	±1%
A-200-D60-SHC-USB	200	17000	60	±3%	±1%

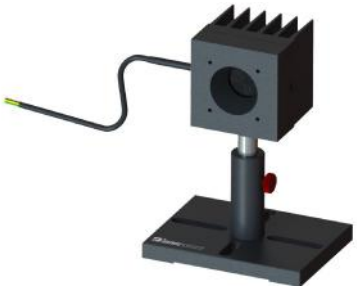

QA-10-D20-BBF

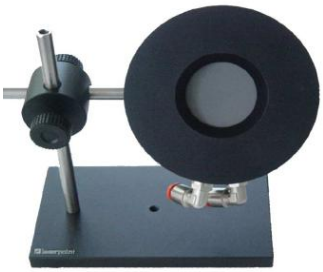

QW-6000-D55-SHC

Fit-50 / Fit-200

CRONOS-LP1.5
CRONOS-LP5.0

A-30-D25-HPB-USB
A-200-D60-SHC-USB

APPENDIX

Optical Material

Light as a spectrum cover a wide wavelength range. Nonetheless, laser with its basic properties emit only a certai wavelength depends on the gain material and design. In order to manipulate the laser on those specific wavelengths, we need various different materials accordingly. The following is a few of most common material used.

BARIUM FLUORIDE (BaF_2)	
Transmission Range (µm)	0.15-12.5
Refractive Index@546.1nm	1.4626
Temperature Coefficient of Refractive Index, /°C	18.1×10^{-6}
Melting Point, ^{0}C	1280
Hardness (Knoop), Kg/mm^2	82
Density, g/cm^3	4.89
Young's Modulus, GPa	53.07

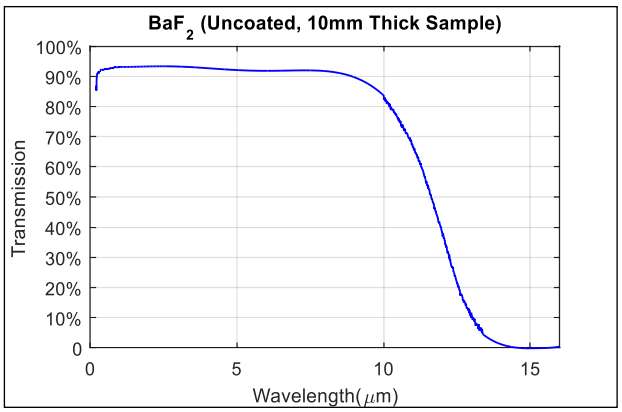

Borosilicate Glass (BK7)	
Transmission Range (µm)	0.35-2
Refractive Index@546.1nm	1.51872
Temperature Coefficient of Refractive Index, /°C	8.3×10^{-6}
Melting Point, ^{0}C	559
Hardness (Knoop), Kg/mm^2	610
Density, g/cm^3	2.51
Young's Modulus, GPa	82

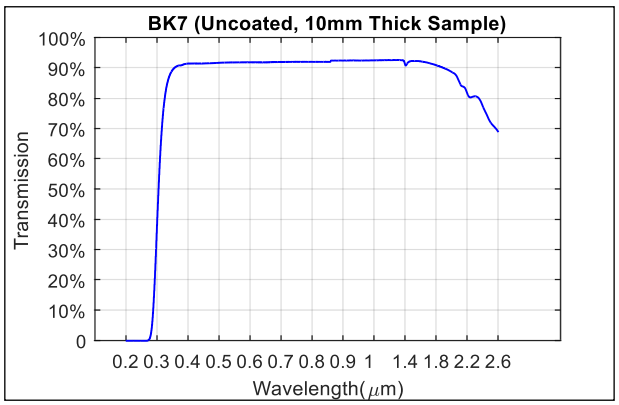

CALCIUM FLUORIDE (CaF_2)	
Transmission Range (µm)	0.13-10
Refractive Index@546.1nm	1.39908
Temperature Coefficient of Refractive Index, /°C	18.85×10^{-6}
Melting Point, ^{0}C	1360
Hardness (Knoop), Kg/mm^2	158.3
Density, g/cm^3	3.18
Young's Modulus, GPa	75.8

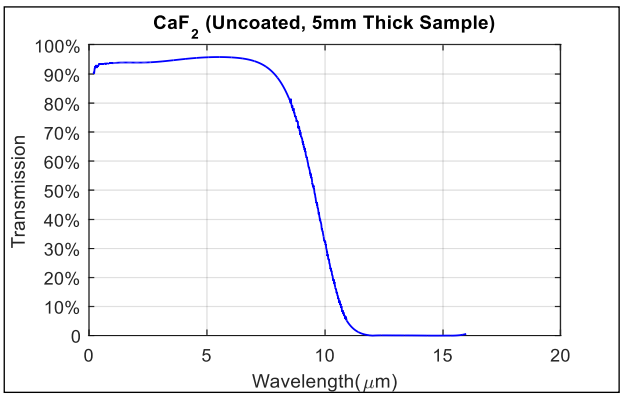

GERMANIUM (Ge)	
Transmission Range (µm)	1.8-23
Refractive Index@546.1nm	4.0034
Temperature Coefficient of Refractive Index, / °C	5.5-6.1x10-6
Melting Point, ^{0}C	936
Hardness (Knoop), Kg/mm^2	780
Density, g/cm^3	5.327
Young's Modulus, GPa	102.7

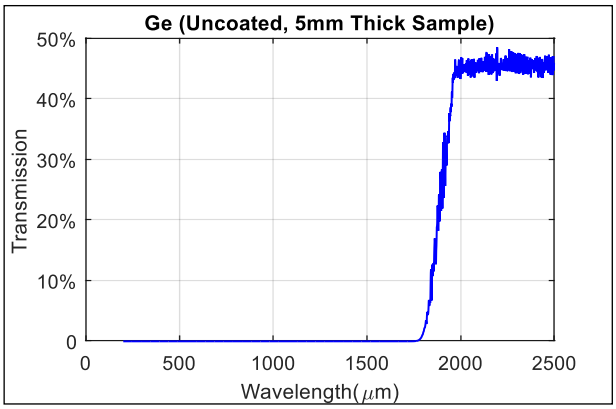

MAGNESIUM FLUORIDE (MgF_2)	
Transmission Range (µm)	0.11-7.5
Refractive Index@546.1nm	1.3836/ 1.3957
Temperature Coefficient of Refractive Index, /°C	13.7/ 8.48 x 10^{-6}
Melting Point, ^{0}C	1255
Hardness (Knoop), Kg/mm^2	415
Density, g/cm^3	3.177
Young's Modulus, GPa	138.5

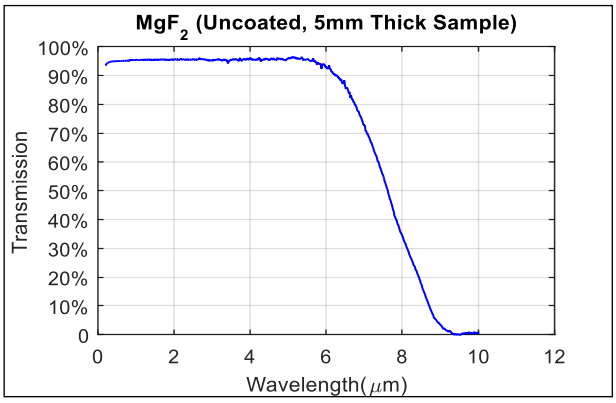

SAPPHIRE (Al_2O_3)	
Transmission Range (µm)	0.15-5.5
Refractive Index@546.1nm	1.755
Temperature Coefficient of Refractive Index, /°C	8.4 x 10-6
Melting Point, ^{0}C	2040
Hardness (Knoop), Kg/mm^2	2000
Density, g/cm^3	3.97
Young's Modulus, GPa	335

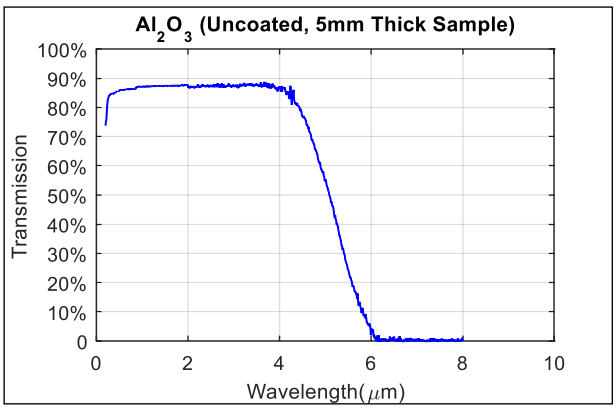

UV Fused Silica (SiO_2)	
Transmission Range (µm)	0.2-2
Refractive Index@546.1nm	1.39908
Temperature Coefficient of Refractive Index, /°C	18.85 x 10^{-6}
Melting Point, ^{0}C	1360
Hardness (Knoop), Kg/mm^2	158.3
Density, g/cm^3	3.18
Young's Modulus, GPa	75.8

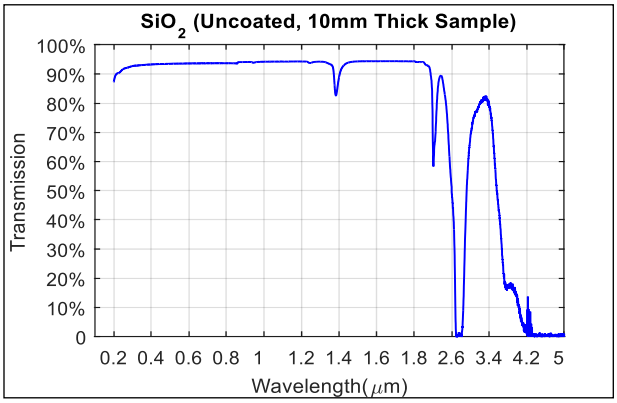

ZINC SELENIDE (ZnSe)	
Transmission Range (μm)	0.5-22
Refractive Index@546.1nm	2.4028
Temperature Coefficient of Refractive Index, ^{0}C	7.8 x 10^{-6}
Melting Point, ^{0}C	1525
Hardness (Knoop), Kg/mm^2	120
Density, g/cm^3	5.27
Young's Modulus, GPa	67.22

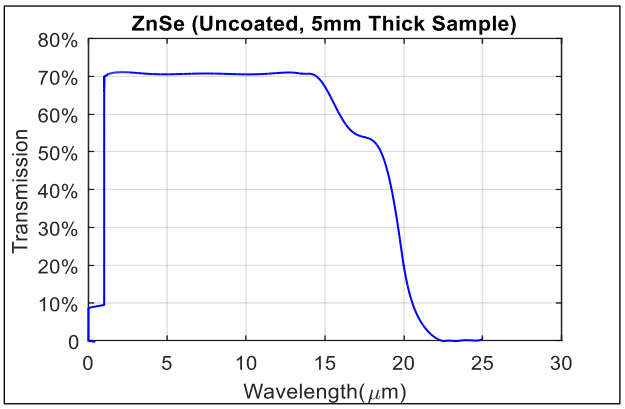

ZINC SULFIDE (ZnS)	
Transmission Range (μm)	0.37-14
Refractive Index@546.1nm	2.2008
Temperature Coefficient of Refractive Index, ^{o}C	5*10-5
Melting Point, ^{0}C	130
Hardness (Knoop), Kg/mm^2	250
Density, g/cm^3	4.09
Young's Modulus, GPa	74.5

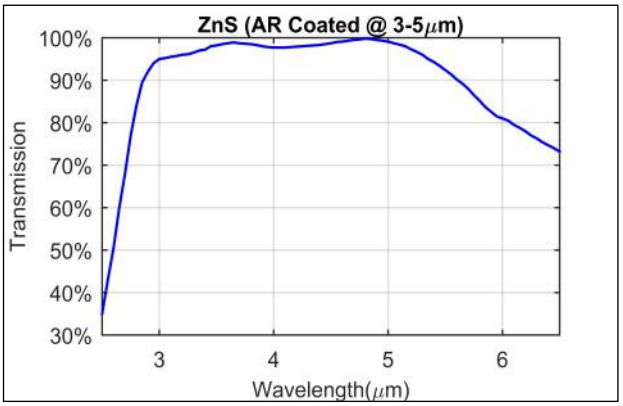

Useful Formula

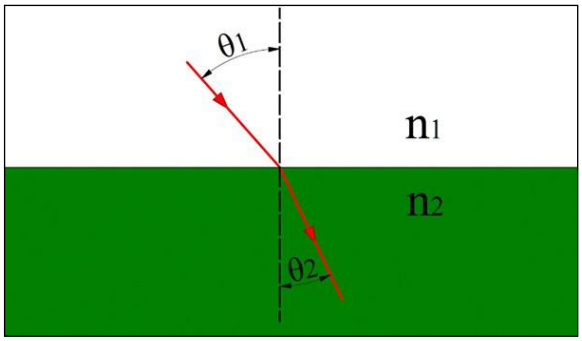

Snell's Law

$$n_1 \sin\theta_1 = n_2 \sin\theta_2$$

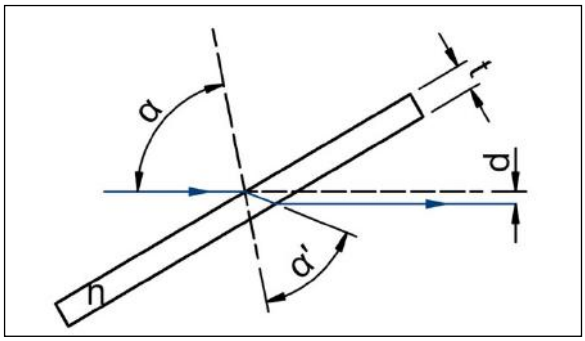

Displacement Through Parallel Plate

$$\mathrm{d} = t\sin\alpha\left(1 - \frac{\cos\alpha}{n\cos\alpha'}\right)$$

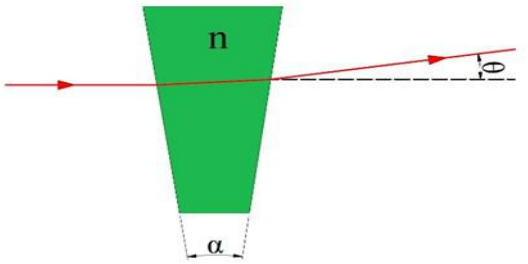

Deviation Through Small Wedge

$$\theta \approx (n-1)\alpha$$

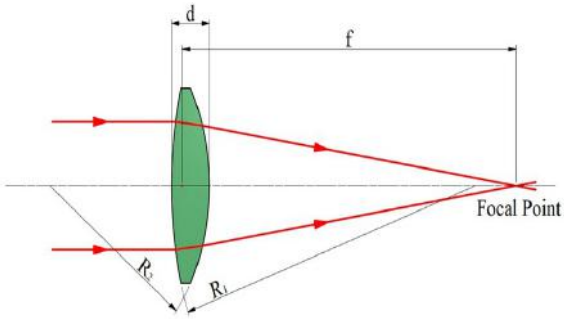

Focal Length

$$\frac{1}{f} = (n-1)[\frac{1}{R_1} - \frac{1}{R_2} + \frac{n-1}{n} \times \frac{d}{R_1 R_2}]$$

Where
f- Focal length,
n- Refractive index of the lens medium
R_1- Radius of first lens surface (positive if convex, and negative if concave.)
R_2- Radius of first lens surface (positive if concave, and negative if convex.)
d- Thickness of the lens

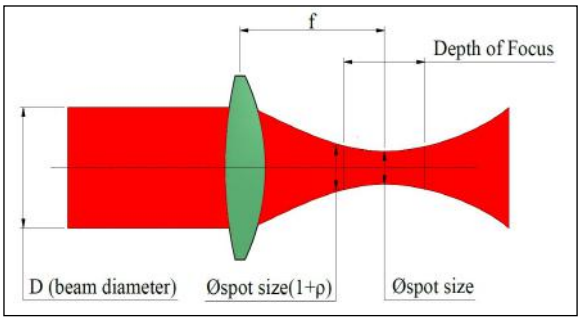

Depth of Focus (DOF)

$$DOF = \frac{8\lambda M^2}{\pi}\sqrt{\rho^2 - 1}\left(\frac{f}{D}\right)^2$$

Where
ρ- Tolerance factor

Spot Size Formula 1

$$\phi_{spot\ size} = \phi_{diffraction} + \phi_{aberration} = \frac{4\lambda M^2 \mathrm{f}}{\pi D} + \frac{kD^3}{f^2}$$

Where
λ- Wavelength
f- Focal length of the lens
D- Diameter of the input beam
k- Index of refraction function
M^2- Beam mode parameter
To obtain a minimum spot size for a given EFL:

$$D = \left(\frac{4\lambda M^2 f^3}{3\pi k}\right)^{\frac{1}{4}}$$

To obtain a minimum spot size for a given beam diameter:

$$f = \left(\frac{\pi k D^4}{2\lambda M^2}\right)^{\frac{1}{3}}$$

Spot Size Formula 2

The spot size of a scan lens can also be calculated by the following formula for simplicity:

$$\phi_{spot\ size} = \frac{\lambda \mathrm{g} f\, \mathrm{g} APO \mathrm{g} M^2}{D}$$

Where
APO- A factor relating ratio of beam diameter D and entrance pupil

Entrance Pupil/ Beam Diameter D	APO
2.0	1.27
1.5	141
1.25	1.56
1.0	1.83
0.9	1.99
0.75	2.32
0.5	2.44

WAVELENGTH OPTO-ELECTRONIC (S) PTE LTD

Contact Us:
Address: Blk 2, Bukit Batok Street 24,
#07-18, Skytech Building
Singapore 659480
Tel: 65-65649624
Fax: 65-65643862
Email: info@wavelength-tech.com
Website: www.wavelength-oe.com

ACCEPTANCE OF TERMS

Wavelength Opto-Electronic (S) accepts orders by mail, phone, fax or e-mail. All orders are subject to acceptance by Wavelength Opto-Electronic (S). Orders must include a Purchase Order Number and specify the Wavelength Technology catalogue numbers or full details of any special requirements. Orders placed by phone must be confirmed by submission of a hard copy Purchase Order. Submission of a Purchase Order shall constitute acceptance of Wavelength Opto-Electronic (S) Terms and Conditions of Sale, set forth herein and in any Quotation provided by Wavelength Opto-Electronic (S).**THESE TERMS AND CONDITIONS OF SALE SHALL BE THE COMPLETE AND EXCLUSIVE STATEMENT OF THE TERMS OF AGREEMENT BETWEEN BUYER AND WAVELENGTH OPTO-ELECTRONIC (S).**

PRICING

Catalogue prices are subject to change without notice. Custom prices are subject to change with five days' notice. Failure to object to the price change on a custom order after notice shall be deemed to be acceptance of the price change. Prices are ex work and do not include freight, duty and insurance fees or any other tax. Prices quoted are valid for 30 days, unless quoted otherwise.

TERMS OF PAYMENT

Singapore: Except as otherwise specified, all payments are due and payable within 30 days from the invoice date. Wavelength Opto-Electronic (S) will accept payment by C.O.D, cheque or an account established with Wavelength Opto-Electronic (S).

International Orders: Orders for delivery to Buyers outside Singapore must be fully prepaid by wire transfer, cheque or by irrevocable letter of credit issued by bank. Payments must include all associated costs. Letter of credit must be valid for 90 days.

*All information provided in this catalogue is for product overview. Wavelength Opto-Electronic (S) reserves the right to make any amendment on parameters and details without prior notice in the course of product improvement.

—This page is intentionally left blank—

WAVELENGTH OPTO-ELECTRONIC (S) PTE LTD

Blk 2 Bukit Batok Street 24 #06-09 Skytech Building Singapore (659480)
Tel: 65-65649624
info@wavelength-tech.com
www.wavelength-oe.com