F-Theta Scan Lens

- 10.6µm (Single Element)

F-theta lenses are commonly used in conjunction with galvanometer scanning mirrors in laser engraving, cutting, and marking systems. The reason it being named as F-theta is due to the radial image height equals to focal length of the lens multiplied by the angle of the chief ray makes in the object space. Hence, from the image height, the distortion of the image can be calculated at each field of interest. Typically the F-theta distortion of this lens is kept less than 1% so that it produces a precise spot on the flat field on image plane.

Specifications	
Diameter Tolerance	+0.0, -0.13mm
Thickness Tolerance	±0.25mm
Paraxial Focal Length	±2%
Centration	3 arc minutes
Clear Aperture	>80%
Surface Figure	λ/2 per 1" @632.8nm
Surface Quality	40-20 scratch and dig
AR/AR Coating	R<0.5% per surface @10.6um

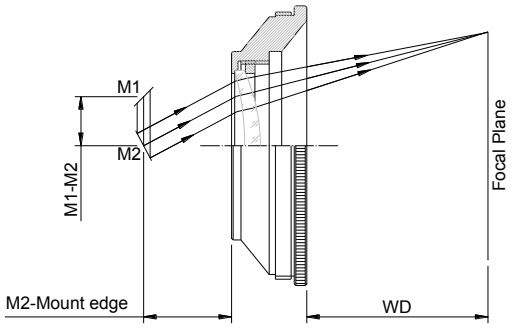

Part No.	EFL (mm)	Scan field (mm)	*Spot size (um)	En-trance Pupil (mm)	*Mir. Sep. (mm)	2nd mir. to lens edge (mm)	Max. Scan Angle (deg.)	BFL (mm)	Lens Dia. (mm)	ET (mm)
SL1-10.6-F50-25.4	50.0	12x12	53.0	12.0	16.0	15.0	10.0	50.8	25.4	2.0
SL1-10.6-F52Z-40	52.0	31x31	67.0	10.0	14.0	15.0	25.0	52.7	40.0	3.2
SL1-10.6-35-52Z1	52.0	35x35	67.0	10.0	14.0	15.0	30.0	52.7	50.0	1.5
SL1-10.6-35-60G	60.0	35x35	78.0	10.0	14.0	15.0	28.0	59.0	55.0	2.2
SL1-10.6-F75Z-48	75.0	50x50	97.0	10.0	14.0	15.0	28.0	75.9	48.0	3.0
SL1-10.6-50-75Z	75.0	50x50	97.0	10.0	14.0	15.0	30.0	75.0	50.0	1.5
SL1-10.6-F100Z-40	100.0	60x60	129.0	10.0	14.0	15.0	25.0	100.9	40.0	3.0
SL1-10.6-F100Z-48	100.0	69x69	107.4	12.0	16.0	15.0	28.0	100.9	48.0	2.4
SL1-10.6-F100Z-48A	100.0	70x70	106.7	12.0	16.0	15.0	29.0	102.8	48.0	3.0
SL1-10.6-F120Z-44	120.0	75x75	154.6	10.0	14.0	15.0	25.0	124.0	44.0	3.0
SL1-10.6-F150Z-40	150.0	90x90	193.4	10.0	14.0	15.0	25.0	152.7	40.0	3.6
SL1-10.6-F150Z-48	150.0	107x107	161.0	12.0	16.0	15.0	29.0	152.7	48.0	3.1
SL1-10.6-F200Z-48	200.0	140x140	171.0	15.0	16.0	15.0	28.0	204.3	48.0	3.0
SL1-10.6-F200Z-70	200.0	140x140	160.0	20.0	24.0	20.0	28.0	208.8	70.0	2.8

Part No.	EFL (mm)	Scan field (mm)	*Spot size (um)	En-trance Pupil (mm)	*Mir. Sep. (mm)	2nd mir. to lens edge (mm)	Max. Scan Angle (deg.)	BFL (mm)	Lens Dia. (mm)	ET (mm)
SL1-10.6-F250Z-48	250.0	175x175	214.0	15.0	16.0	15.0	28.0	256.0	48.0	3.2
SL1-10.6-F300Z-48	300.0	210x210	322.0	12.0	16.0	15.0	28.0	308.6	48.0	3.9
SL1-10.6-F300Z-48B	300.0	215x215	322.0	12.0	16.0	15.0	28.0	307.7	48.0	3.0
SL1-10.6-F360Z-48	359.1	250x250	385.0	12.0	16.0	15.0	28.0	369.2	48.0	4.0
SL1-10.6-F420Z-70	420.0	295x295	268.0	20.0	24.0	20.0	28.0	430.0	70.0	3.5
SL1-10.6-F420Z-75	420.0	300x300	268.0	20.0	24.0	20.0	28.0	430.0	75.0	3.4
SL1-10.6-F435Z-48	433.0	300x300	463.5	12.0	16.0	15.0	28.0	444.0	48.0	3.0
SL1-10.6-F450Z-48	448.5	320x320	478.0	12.0	16.0	15.0	28.0	462.0	48.0	2.8
SL1-10.6-F480Z-48	480.0	335x335	515.0	12.0	16.0	15.0	28.0	492.0	48.0	4.2
SL1-10.6-F480Z-70	480.0	350x350	305.0	20.0	24.0	20.0	28.0	496.3	70.0	3.9
SL1-10.6-F573Z-62	573.0	365x365	364.0	20.0	24.0	20.0	25.0	591.0	62.0	4.0
SL1-10.6-F573Z-48	573.0	415x415	614.0	12.0	16.0	15.0	28.0	591.0	48.0	4.2
SL1-10.6-F573Z-62	573.0	365x365	364.0	20.0	24.0	20.0	25.0	591.0	62.0	4.0
SL1-10.6-F574Z-75	574.0	400x400	364.0	20.0	24.0	20.0	28.0	591.0	75.0	3.8
SL1-10.6-F620Z-70	620.0	450x450	396.4	20.0	24.0	20.0	28.0	636.0	70.0	3.9
SL1-10.6-F720Z-75	720.0	500x500	454.6	20.0	24.0	20.0	28.0	741.0	75.0	2.7
SL1-10.6-F720Z-48	720.7	531x531	783.0	12.0	16.0	15.0	28.0	741.0	48.0	3.0.
SL1-10.6-F740Z-88	740.0	540x540	476.3	20.0	24.0	20.0	28.0	759.0	88.0	4.2
SL1-10.6-F830Z-75	830.0	600x600	532.4	20.0	24.0	20.0	28.0	848.0	75.0	4.0
SL1-10.6-F934Z-48	934.0	685x685	1000.0	12.0	16.0	15.0	28.0	957.7	48.0	3.1
SL1-10.6-F1100Z-76	1100.0	700x700	558.7	25.0	28.0	20.0	25.0	1138.0	76.0	5.2
SL1-10.6-F1150Z-48	1150.0	800x800	1231.0	12.0	16.0	15.0	28.0	1177.0	48.0	3.0
SL1-10.6-F1191Z-48	1191.6	770x770	1276.0	12.0	16.0	15.0	25.0	1220.0	48.0	3.0
SL1-10.6-F2122Z-48	2128.0	1385x1385	2283.0	12.0	16.0	15.0	25.0	2176.0	48.0	3.5
SL1-10.6-35-60G	60.0	35x35	78.0	10.0	14.0	15.0	28.0	59.0	55.0	2.2
SL1-10.6-50-80G	79.7	50X50	154.0	12.0	16.0	15.0	17.0	78.0	55.0	1.9
SL1-10.6-70-100G	99.9	70X70	163.4	12.0	16.0	15.0	20.0	99.2	55.0	2.8
SL1-10.6-110-173G	172.5	110X110	206.0	12.0	16.0	15.0	18.0	174.7	55.0	3.1
SL1-10.6-175-250G	250.0	175X175	280.0	12.0	16.0	15.0	20.0	254.0	55.0	3.5
SL1-10.6-300-420G	420.0	300X300	335.0	20.0	24.0	20.0	20.0	427.8	80.0	4.3
SL1-10.6-30-75E	75.0	30X30	123.0	24.0	24.0	20.0	12.0	73.0	60.0	1.5

Part No.	EFL (mm)	Scan field (mm)	*Spot size (um)	En-trance Pupil (mm)	*Mir. Sep. (mm)	2nd mir. to lens edge (mm)	Max. Scan Angle (deg.)	BFL (mm)	Lens Dia. (mm)	ET (mm)
SL1-10.6-50-97E	97.0	50x50	121.0	18.0	24.0	20.0	20.0	64.0	96.0	1.7
SL1-10.6-50-105E	105.0	50x50	137.0	12.0	16.0	15.0	20.0	104.0	64.0	1.8
SL1-10.6-50-152E	152.0	50x50	170.0	12.0	16.0	15.0	13.0	153.0	49.0	2.8
SL1-10.6-90-151E	151.0	90x90	205.0	12.0	16.0	15.0	23.0	153.0	70.0	2.1
SL1-10.6-110-178E	178.0	110x110	188.0	18.0	24.0	20.0	25.0	178.0	74.0	2.2

Mounting is available upon request, we provide two types of common mountings for industry application:
R - with M85x1
S - with 3 holes 120 degree apart at diameter 73.2mm
Data Sheet for mounted SL1-10.6 series is available upon request.

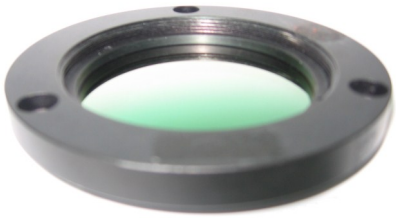

- Material: G-GaAs, E-Ge (only transmit 10.6um)
- Material: Z- ZnSe (transmit both 10.6um and visible)
- *Recommended X-Y Mirror separation.
- *Diffraction Limited Spot Size.
- *spot size is not guaranteed, and for reference only.

- 10.6µm (Double Element)

Doublet F-theta Scanning lens provide better performance than singlet. It has more ever spot size and less distortion over the scan field. We use ZnSe or GaAs for this series of scan lens.

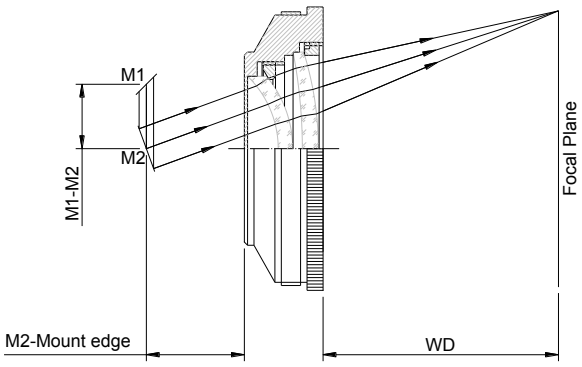

Part No.	EFL (mm)	Scan Field (mm)	Average Spot Size (um)	En-trance Pupil (mm)	*Mir. Sep. (mm)	2nd Mir. to Mount Edge (mm)	Max. Scan Angle (deg.)	WD (mm)
SL2-10.6-35-60G	60.5	35x35	75.0	12.0	17.0	20.5	25.0	57.8
SL2-10.6-50-80G	80.0	50x50	113.0	14.0	20.0	12.8	25.0	75.7
SL2-10.6-70-122G	122.0	70x70	130.0	14.0	20.0	14.5	23.0	135.9
SL2-10.6-110-170G	170.0	110x110	225.0	10.0	13.0	19.7	23.0	185.0
SL2-10.6-140-220G	220.0	140x140	243.1	14.0	16.0	14.8	25.0	243.7
SL2-10.6-175-275G	275.0	175x175	300.0	14.0	20.0	16.4	28.0	305.0
SL2-10.6-210-300G	300.0	210x210	300.0	14.0	20.0	16.3	28.0	334.9
SL2-10.6-250-360G	360.0	250x250	465.0	14.0	20.0	20.0	20.0	393.0
SL2-10.6-300-420G	420.0	300x300	570.0	14.0	20.0	20.0	20.0	465.0
SL2-10.6-350-485G	485.0	350x350	822.0	14.0	20.0	30.0	20.0	528.0
SL2-10.6-F420G-20	420.0	300x300	505.0	20.0	30.0	30.0	20.0	470.0
SL2-10.6-110-150Z	150.0	105x105	171.7	14.0	20.0	11.6	28.0	161.7
SL2-10.6-F200Z	200.0	140x140	193.5	14.0	16.0	15.3	28.8	229.4
SL2-10.6-F250Z	250.0	175x175	252.5	14.0	20.0	22.3	28.4	285.5
SL2-10.6-F300Z-20	300.0	210x210	260.0	20.0	20.0	10.2	28.0	327.8
SL2-10.6-250-360Z	360.0	250x250	489.0	14.0	20.0	20.0	20.0	393.0
SL2-10.6-300-420AZ	420.0	305x305	349.6	16.0	20.0	17.0	28.0	466.0
SL2-10.6-400-560Z	560.0	400x400	905.0	14.0	20.0	26.0	20.0	590.0

- Material: G-GaAs (transmit 10.6um only)
- Material: Z- ZnSe (transmit both 10.6um and visible)
- *Recommended X-Y Mirror separation.
- *spot size is not guaranteed, and for reference only.

- 9.4µm (Triple Element Made of ZnSe)

Triplet F-theta scan lens is developed to achieve minimum spot size and F-theta distortion. These give diffraction limited performance and further improved over doublet scan lens.

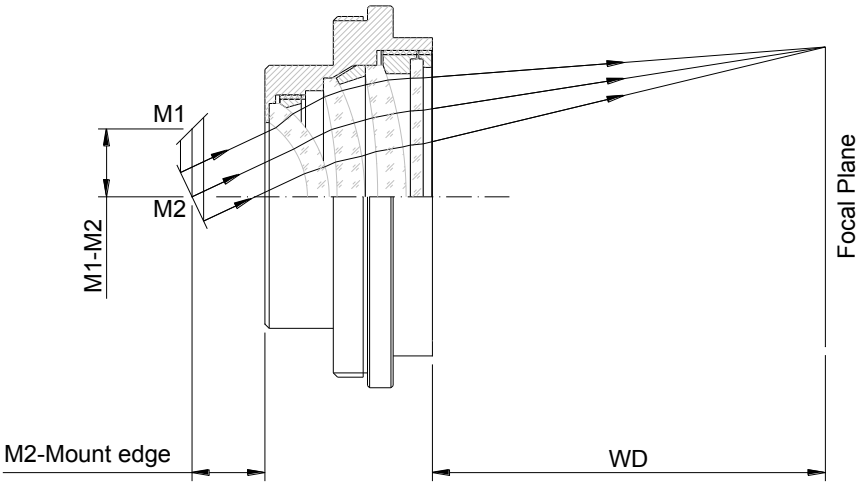

Part No.	EFL (mm)	Scan Filed (mm²)	Average spot size (um)	Entrance pupil (mm)	*Mirrors separation (mm)	2nd mirror to mount edge (mm)	Max scan angle	WD (mm)
SL3-9.4-50-80W	80.0	50X50	84.5	14.0	18.0	8.0	+/- 25°	89.4
SL3-9.4-60-105Z	105.0	60X60	114.0	12.0	16.0	13.5	+/- 23°	130.5

*Recommended X-Y Mirror separation.
*Material: ZnSe
*spot size is not guaranteed, and for reference only.

- 1550nm,1064nm,532nm,355nm,266nm

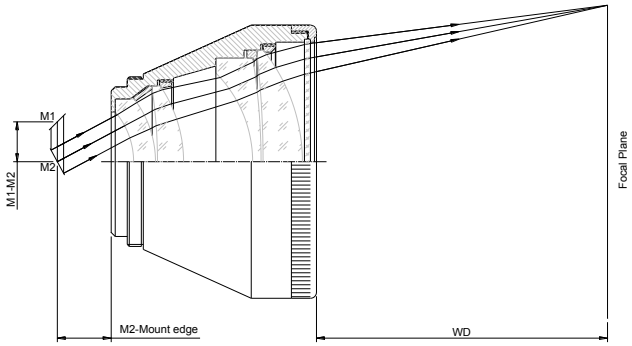

Aperture Stop is set at center point of X-Y mirror in case of two-axis scanning system.

Eye Safe Laser (Wavelength 1550nm)

Part No.	EFL (mm)	Scan Angle (±°)	Scan Field (mm)	Aper-ture Stop (mm)	Ent. Pupil (mm)	Average spot size (um)	Total Length (mm)	WD (mm)
SL-1550-100-160	160.0	25.0	100×100	19.5	9.0	43.0	47.0	175.6

Nd:YAG LASER (Wavelength 1064 nm)

Part No.	EFL (mm)	Scan Angle (±°)	Scan Field (mm)	Aperture Stop (mm)	Ent. pupil (mm)	Average spot size (um)	Total Length (mm)	WD (mm)
SL-1064-45-80	80.0	23.0	45x45	21.5	10.0	11.9	29.2	91.4
SL-1064-70-100	100.0	25.0	70x70	17.5	14.0	11.0	49.5	98.8
SL-1064-105-152	152.0	25.0	105x105	19.3	14.0	28.0	48.0	175.0
SL-1064-50-160	160.0	18.0	50x50	16.2	8.0	35.8	27.0	182.3
SL-1064-100-160A	160.0	25.0	100x100	16.8	10.0	27.5	52.1	178.4
SL-1064-F160-30	160.0	22.5	90x90	33.6	30.0	17.5	84.3	171.6
SL-1064-112-163	163.0	25.0	112x112	21.2	10.0	31.5	49.0	184.0
SL-1064-112-163A	163.0	25.0	112x112	20.3	10.0	27.8	47.0	181.7
SL-1064-114-163R1	163.0	25.0	114x114	25.0	15.0	24.0	53.9	184.0
SL-1064-152-192	192.0	32.0	152x152	22.8	15.0	25.0	63.0	221.8
SL-1064-F201-30	201.0	19.0	90x90	43.0	30.0	12.0	83.0	243.0
SL-1064-140-210	210.0	25.0	140x140	20.2	14.0	24.5	50.0	238.4
SL-1064-175-254	254.0	25.0	175x175	25.5	16.0	43.5	61.7	269.9
SL-1064-F254-30	254.0	20.0	124x124	38.3	30.0	15.5	56.7	302.2
SL-1064-180-260	260.0	25.0	180x180	25.1	10.0	47.0	63.0	297.0
SL-1064-205-330	330.0	25.0	205x205	29.7	14.0	50.0	60.0	385.0
SL-1064-305-338	338.0	36.5	305x305	28.5	15.0	25.5	52.5	362.8
SL-1064-300-420	420.0	29.0	300x300	25.7	14.0	50.5	69.4	492.0
SL-1064-500-815	815.0	25.0	500x500	34.1	24.0	50.0	104.9	962.0

GREEN LASER (Wavelength 532 nm)

Part No.	EFL (mm)	Scan Angle (±°)	Scan Field (mm)	Aperture Stop (mm)	Ent. pupil (mm)	Average spot size (um)	Total Length (mm)	WD (mm)
SL-532-70-100	100.0	25.0	70x70	17.5	14.0	12.0	50.0	100.0
SL-532-90-120A	120.0	25.0	80x80	14.7	8.0	10.8	38.8	134.0
SL-532-115-165	165.0	28.3	115x115	20.8	10.0	18.5	47.0	183.5
SL-532-150-254	254.0	25.0	150x150	17.9	10.0	21.5	51.0	280.0
SL-532-225-410	410.0	25.0	225x225	19.8	15.0	15.0	48.9	443.7
SL-532-350-508	507.0	28.2	350x350	40.1	16.0	29.0	62.5	590.5
SL-532-510-740	740.0	20.0	510x510	41.8	16.0	18.5	65.0	896.5

UV LASER (Wavelength 355 nm)

Part No.	EFL (mm)	Scan Angle (±°)	Scan Field (mm)	Aperture Stop (mm)	Ent. pupil (mm)	Average spot Size (um)	Total Length (mm)	WD (mm)
SL-355-60-100Q	100.0	25.0	61.5x61.5	21.4	6.0	10.0	62.5	133.4
SL-355-112-160Q	160.0	29.0	112x112	20.1	6.0	18.0	50.4	205.8
SL-355-155-250	250.0	25.5	155x155	23.6	10.0	14.0	54.9	299.8
SL-355-212-328	328.0	26.4	212x212	28.6	10.0	17.5	79.6	406.4
SL-355-350-580	580.0	24.5	350x350	33.3	10.0	28.5	65.1	684.8
SL-355-500-810	810.0	28.0	500x500	26.9	10.0	43.0	83.2	976.4
SL-355-650-1000	1000.0	26.5	650x650	32.0	10.0	50.8	91.9	1200.1

UV LASER (Wavelength 266 nm)

Part No.	EFL (mm)	Scan Angle (±°)	Scan Field (mm)	Aperture Stop (mm)	Ent. pupil (mm)	Average spot Size (um)	Total Length (mm)	WD (mm)
SL-266-70-100	101.5	29.2	70x70	14.5	5.0	8.3	52.0	129.4
SL-266-100-160	142.3	25.0	100x100	21.1	5.0	16.5	36.7	198.8
SL-266-90-254	254.0	18.0	90x90	21.0	4.0	16.0	47.0	253.0

1064nm Fiber Scan Lens

Part No.	EFL (mm)	Scan Angle(±°)	Scan Field (mm)	Aperture Stop	Ent. pupil (mm)	Average spot size (um)	Total Length (mm)	WD(mm)
SLF-1064-63-8	63.0	25.5	36×36	11.9	8.0	12.0	26.8	69.0
SLF-1064-160-8	160.0	25.0	100×100	13.4	8.0	30.5	30.8	188.1
SLF-1064-254-8	254.0	25.0	155×155	13.5	8.0	30.5	42.9	293.5

- 1064nm, 940nm (Achromatic)

With CCD camera been equipped into laser scanning system, Achromatic scan lens is developed to color correct different wavelengths images.
The focal length, working distance and focus spot are identically for both laser working wavelength and visible wavelength, it will help CCD to capture the actual image through F-theta scan lens, generally low dispersion crown glass and high dispersion flint glass are jointly used to correct the chromatic aberration.

Nd:YAG Laser (wavelength 1064/532nm, 1064/635nm)

Part No.	EFL (mm)	Wave-length	Scan Angle (±°)	Scan Field (mm)	Ent. pupil (mm)	Average spot size (um)	Total Length (mm)	WD (mm)	Screw Thread
SL-1064-532-100-163	163.0	1064/532	25.0	100x100	12.0	21.0	78.2	159.7	M85x1
SL-1064-532-175-254	254.0	1064/532	28.0	175x175	15.0	25.0	101.8	262.8	M85x1
SL-1064-635-100-163	163.0	1064/635	25.5	100x100	12.0	22.5	87.6	157.6	M85x1
SL-1064-635-180-260	260.0	1064/635	28.3	180x180	15.0	28.0	102.3	261.4	M85x1

Achromatic Lens (wavelength 808/940nm)

Part No.	EFL (mm)	Wave-length	Scan Angle (±°)	Scan Field (mm)	Ent. pupil (mm)	Average spot size (um)	Total Length (mm)	WD (mm)	Screw Thread
SL-940-808-102-163AC	163.0	940/808	26.4	102×102	20.0	11.0	90.5	153.6	M85x1

*spot size is not guaranteed, and for reference only.